COUNTY GOVERNMENT OF BOMET

DEPARTMENT OF ROADS

ROUTINE MAINTENANCE OF CHEBOLE-KAPANGOROR-SUMONI-KAPTULWA ROAD (4.5KM)

TENDER NO: **CGB/DR/KRB/006/2020-2021**

(WOMEN)

BID DOCUMENT

1. **FORM OF BID**
2. **APPENDIX TO FORM OF BID**
3. **STANDARD FORMS & SCHEDULES OF SUPPLEMENTARY INFORMATION**
4. **INSTRUCTIONS TO BIDDERS**
5. **QUALIFICATION CRITERIA**
6. **CONDITIONS OF CONTRACT**
7. **STANDARD SPECIFICATIONS**
8. **SPECIAL SPECIFICATIONS**
9. **BILLS OF QUANTITIES**
10. **DRAWINGS**

SEPTEMBER, 2020

COUNTY EXECUTIVE DEPARTMENT OF ROADS, PUBLIC WORKS & TRANSPORT COUNTY GOVERNMENT OF BOMET P.O. Box 19-20400 BOMET	CHIEF OFFICER DEPARTMENT OF ROADS, COUNTY GOVERNMENT OF BOMET P. O. BOX 19-20400 BOMET

TABLE OF CONTENTS

SECTION 1: FORM OF BID 1

SECTION 2: APPENDIX TO FORM OF BID 4

SECTION 3: STANDARD FORMS AND SCHEDULES OF SUPPLEMENTARY INFORMATION 7

SECTION 4: INSTRUCTIONS TO BIDDERS 34

SECTION 5: QUALIFICATION CRITERIA 54

SECTION 7: STANDARD SPECIFICATIONS 111

SECTION 8: SPECIAL SPECIFICATIONS 113

SECTION 9: BILLS OF QUANTITIES 132

SECTION 10: DRAWINGS 139

SECTION 1: FORM OF BID

FORM OF BID

(NOTE: The Appendix forms part of the Bid. Bidders are required to fill all the blank spaces in this form of Bid and Appendix)

ROUTINE MAINTENANCE OF CHEBOLE-KAPANGOROR-SUMONI-KAPTULWA ROAD (4.5KM)

TENDER NO: CGB/DR/KRB/006/2020-2021

TO:

COUTY EXECUTIVE
DEPARTMENT OF ROADS, TRANSPORT & PUBLIC WORKS
COUNTY GOVERNMENT OF BOMET
P. O. BOX 19-20400
BOMET

Sir,

1. Having examined the Conditions of Contract, Specifications, Bills of Quantities, and Drawings for the execution of the above named works we, the undersigned, offer to construct and install such works and remedy any defects therein in conformity with the said Bills of Quantities, Conditions of Contract, Specifications and Drawings for the sum of

(Insert amount in words)

……

……

……

……

(Insert amount in

figures)……

……

As specified in the Appendix to Bid or such other sums as may be ascertained in accordance with the said Conditions.

2. We undertake, if our bid is accepted, to commence the works within twenty-eight (28) days of receipt of the Engineer's Order to Commence, and to complete and deliver the whole of the works comprised in the contract within the time stated in the Appendix to Form of Bid.

3. If our bid is accepted we will, when required, obtain the guarantee of a Bank or other sureties (to be approved by you) to be jointly and severally bound with us in a sum not exceeding 5% of the above named sum for the due performance of the contract under the terms of a Bond to be approved by you.

4. We agree to abide by this bid for the period of one hundred and twenty (120) days from the date fixed for receiving the same and it shall remain binding upon us and may be accepted at any time before the expiration of that period.

5. We understand that you are not bound to accept the lowest or any bid you may receive.

6. On the basis of our previous experience we are fully experienced and competent in the type of work included in this BID and we have adequate financial resources to carry out the works described within the period for completion. We are in a position to fulfil the contract for which we have Bided.

Dated this …….. Day of …… 20 ……..

Signature:……in the capacity of ……..……..

Duly authorized to sign bids on behalf of (Name of Bidder) …… …….

……..…….

(Address of Bidder): ……

(Name of Witness): ……

(Signature of Witness): ……

(Address of Witness): ……

(Occupation of Witness): ……

SECTION 2: APPENDIX TO FORM OF BID

APPENDIX TO FORM OF BID

(This appendix forms part of the bid)

DESCRIPTION	Conditions of Contract Clause	DETAILS
Bid Security (Bank Guarantee Only)		Kshs. nil
Employer	1.1 (a) (i)	County Executive Department of Roads, Transport & Public works County Government of Bomet
Engineer	1.1 (a) (iv)	Chief officer Department of Roads County Government of Bomet
Contract Documents	5.1 (a)	The language of the contract is English
	5.1 (b)	The law in force is that of the Republic of Kenya
Amount of Performance Security (Unconditional Bank Guarantee)	10.1	The performance security shall be in the form of an unconditional bank guarantee in the amount of five (5) percent of the Contract Price
Access to Data	11.1	Data made available by the Employer under Sub clause 11.1 is open for inspection at the offices of the Chief Officer Department of Roads County government of Bomet
Programme to be submitted	14.1	Not later than 14 (Fourteen) days after issuance of Order to Commence
Cash Flow Estimate	14.3	Not later than 14 (Fourteen) days after issuance of Order to Commence
Minimum Amount of Third Party Insurance	23.2	1% of the Contract Sum
Contractor All risk guarantee	20.5	1% of the contract sum
Period for commencement, from Engineer's Order to Commence	41.1	Not later than 28 (Twenty Eight) days after Notice of Order to Commence
Time for Completion	43.1	Three (3) Months
Amount of Liquidated Damages	47.1	0.05% of the Contract Price per day
Limit of Liquidated Damages	47.1	5% (Five percent) of the Contract Price.
Defects Liability Period	49.1	One (1) Month
Advance Payment	60.1	There shall be **NO** advance payment.
Minimum Amount of Interim Payment Certificates	60.2	10% of contract price
Retention Money	60.5	10% (Ten percent) of Interim Payment Certificates

Signature of Bidder……. Date ……

(Failure to sign this appendix will imply the bidder doesn't accept the above conditions and hence disqualified)

DESCRIPTION	**Conditions of Contract CLAUSE**	**DETAILS**
Limit of Retention Money	60.2	10% (Ten) percent of the Contract Price
Number of Copies of monthly Statement and statements of Completion and Final Statement	60.2 60.3 60.11 60.12	3 copies
Time within which payment to be made after Interim Payment Certificate signed by Engineer	60.4	90 days
Time within which payment to be made after Final Payment Certificate signed by the Engineer	60.4	90 days
Currency of Payment	60.6	Kenya Shillings only
Appointer of Arbitrator	67.3	The Chartered Institute of Arbitrators (Kenya)
Notice to Employer and Engineer	68.2	The Employer's address is: County Executive Department of roads, Transport,& Public works County Government of Bomet P. O. BOX 19-20400 **Bomet** The Engineer's address is: Chief Officer Department of roads County Government of Bomet P. O. BOX 19-20400 **Bomet** Web:www.bomet.go.ke

Signature of Bidder……..……. Date ……

(Failure to sign this appendix will imply the bidder doesn't accept the above conditions and hence disqualified)

SECTION 3: STANDARD FORMS AND SCHEDULES OF SUPPLEMENTARY INFORMATION

STANDARD FORMS & SCHEDULES OF SUPPLEMENTARY INFORMATION

STANDARD FORMS 9

3.1 BANK GUARANTEE FOR ADVANCE PAYMENT 10

3.2 FORM OF BANK BID SECURITY 12

3.3 INVITATION FOR BIDS 14

3.4 LETTER OF ACCEPTANCE 15

3.5 FORM OF AGREEMENT 16

3.6 PERFORMANCE BANK GUARANTEE (UNCONDITIONAL) 18

3.7 FORM OF LETTER OF NOTIFICATION OF AWARD 19

SCHEDULES OF SUPPLEMENTARY INFORMATION 20

3.8 BID QUESTIONNAIRE 21

3.9 CONFIDENTIAL BUSINESS QUESTIONNAIRE 22

3.10 CERTIFICATE OF BIDDER'S VISIT TO SITE 24

3.11 FORM OF WRITTEN POWER OF ATTORNEY 25

3.12 SCHEDULE OF COMPLETED CIVIL WORKS CARRIED OUT BY THE BIDDER IN THE LAST FIVE YEARS 27

3.13 SCHEDULE OF PROJECTS CURRENTLY IN PROGRESS 28

3.14 FINANCIAL STANDING 29

3.15 OTHER SUPPLEMENTARY INFORMATION 30

3.16 DECLARATION FORM 31

3.17 ANTI CORRUPTION DECLARATION / COMMITMENT / PLEDGE FORM 33

STANDARD FORMS

3.1 BANK GUARANTEE FOR ADVANCE PAYMENT

To: COUNTY EXECUTIVE
DEPARTMENT OF ROADS, TRANSPORT & PUBLIC WORKS
COUNTY GOVERNMENT OF BOMET
P. O. BOX 19-20400
BOMET

_____*(Date)*

Gentlemen,
ROUTINE MAINTENANCE OF CHEBOLE-KAPANGOROR-SUMONI-KAPTULWA ROAD (4.5KM)
TENDER NO: CGB/DR/KRB/006/2020-2021

In accordance with the provisions of the Conditions of Contract of the above-mentioned Contract,
We,_____*[name and Address of Contractor]* (hereinafter called "the Contractor") shall deposit with _____*[name of Employer]* a bank guarantee to guarantee his proper and faithful performance under the said Contract in an amount of KShs._____*[amount of Guarantee in figurers]* Kenya Shillings_____*[amount of Guarantee in words]*.

We, _____[*bank or financial institution*], as instructed by the Contractor, agree unconditionally and irrevocably to guarantee as primary obligator and not as Surety merely, the payment to _____[*name of Employer*] on his first demand without whatsoever right of objection on our part and without his first claim to the Contractor, in the amount not exceeding
Kshs_____[*amount of Guarantee in figures*] Kenya Shillings
_____
[*amount of Guarantee in words*], such amount to be reduced periodically by the amounts recovered by you from the proceeds of the Contract.

We further agree that no change or addition to or other modification of the terms of the Contract or of the Works to be performed there under or of any of the Contract documents which may be made between _____[*name of Employer*] and the Contractor, shall in any way release us from any liability under this guarantee, and we hereby waive notice of any such change, addition or modification.

No drawing may be made by you under this guarantee until we have received notice in writing from you that an advance payment of the amount listed above has been paid to the Contractor pursuant to the Contract.

This guarantee shall remain valid and in full effect from the date of the advance payment under the Contract until _____(*name of Employer*) receives full payment of the same amount from the Contract.

Yours faithfully,

Signature and Seal _____

Name of the Bank or financial institution _____

Address
_____

Date _____

Witness: Name:
_____

Address: _____

Signature: _____

Date: _____

3.2 FORM OF BANK BID SECURITY

Note: The bidder shall complete only this Form of Bank guarantee. No other Form of Bid Bond or any other forms of security will be accepted. Bidders who fail to comply with this requirement will be disqualified.

WHEREAS [Name of bidder]

……

……

(here in after called "the Bidder") has submitted his bid dated ……..……

for the **ROUTINE MAINTENANCE OF CHEBOLE-KAPANGOROR-SUMONI-KAPTULWA ROAD (4.5KM)**
TENDER NO: CGB/DR/KRB/006/2020-2021
Herein after called "the bid"

KNOW ALL MEN by these presents that we [*Name of Bank*]

……...……

……

of [Name of Country]

……
having our registered offices at

……
(hereinafter called the Bank) are bound unto the Director General, Kenya Urban Roads Authority (hereinafter called "The Employer") in the sum of

(in words KShs)…….

……..……

(In figures KShs)……

for which payment will be well and truly made to the said Employer the Bank binds itself, its successors and assigns by these presents.

Signed for the said Bank this …….day of ……20…….

THE CONDITIONS of this obligation are:

1. If the bidder withdraws his Bid during the period of bid validity specified by the Bidder on the Bid Form; or

2. If the Bidder refuses to accept the correction of errors in his bid; or

3. If the Bidder having been notified of the acceptance of his bid by the Employer during the period of Bid Validity

   (i) fails or refuses to execute the Form of Agreement in accordance with the Instructions to Bidders when required or

   (ii) fails or refuses to furnish the Performance Security, in accordance with the Instructions to Bidders.

   We undertake to pay to the Employer up to the above amount upon receipt of his first written demand, without the Employer having to substantiate his demand, provided that in his demand the Employer will note that the amount claimed by him is due to him owing to the occurrence of any of the above conditions, specifying the occurred condition or conditions.

   This guarantee will remain in force up to and including thirty (30) days after the date of expiration of the bid validity, as stated in the Instructions to Bidders.

At the request of the Employer the Bid validity period may be extended by mutual agreement between the Employer and the Bidder and we undertake to extend the validity of this surety accordingly without you having to inform us of such an extension of the Bid validity period if within this period the Bidder has been notified of the acceptance of his Bid. This Surety shall remain valid up to the time the Contract Agreement has been executed.

AUTHORIZED SIGNATURE OF THE BANK

……..

NAME OF SIGNATORY

…… DATE……

TITLE OF SIGNATORY ……..

NAME OF THE WITNESS ……..

SIGNATURE OF THE WITNESS …… DATE …….

ADDRESS OF THE WITNESS ……

3.3 INVITATION FOR BIDS

3.4 LETTER OF ACCEPTANCE

[Letter head paper of the Employer]

_____ *[date]*

To: _____ *[name of the Contractor]*

_____

_____ *[address of the Contractor]*

Dear Sir,

This is to notify you that your Bid dated _____for the execution of

ROUTINE MAINTENANCE OF CHEBOLE-KAPANGOROR-SUMONI-KAPTULWA ROAD (4.5KM)
TENDER NO: CGB/DR/KRB/006/2020-2021

For the Contract Price of
Kshs._____*[amount in figures]* Kenya Shillings_____*(amount in words)* in accordance with the Instructions to Bidders is hereby accepted.

You are hereby instructed to proceed with the execution of the said Works in accordance with the Contract documents.

Authorized Signature

……..

Name and Title of Signatory

……..

Attachment: Agreement

3.5 FORM OF AGREEMENT

THIS AGREEMENT, made the_____ day of_____20_____ between the **County Executive, Department of Roads, Public works & Transport, County Government of Bomet** (hereinafter called "the Employer") of the one part AND _____of [or whose registered office is situated at] _____
(Hereinafter called "the Contractor") of the other part.

WHEREAS THE Employer is desirous that the Contractor executes
ROUTINE MAINTENANCE OF CHEBOLE-KAPANGOROR-SUMONI-KAPTULWA ROAD (4.5KM)
TENDER NO: CGB/DR/KRB/006/2020-2021

(hereinafter called "the Works") located in Bomet County and the Employer has accepted the bid submitted by the Contractor for the execution and completion of such Works and the remedying of any defects therein for the Contract Price of Kshs. _____ [*Amount in figures*], Kenya Shillings_____
[*Amount in words]*.

NOW THIS AGREEMENT WITNESSETH as follows:

1. In this Agreement, words and expressions shall have the same meanings as are respectively assigned to them in the Conditions of Contract hereinafter referred to.

2. The following documents shall be deemed to form and shall be read and construed as part of this Agreement:

   (i) Letter of Acceptance
   (ii) Form of Bid and Appendix to Form of Bid
   (iii) Conditions of Contract, Part I
   (iv) Conditions of Contract, Part II
   (v) Specifications
   (vi) Drawings
   (vii) Priced Bill of Quantities

   All aforesaid documents are hereinafter referred to as "The Contract".

3. In consideration of the payment to be made by the Employer to the Contractor, the Contractor hereby covenants with the Employer to execute, complete and maintain the works in conformity in all respects with the provisions of the Contract.
4. The Employer hereby covenants to pay the Contractor in consideration of the execution, completion and maintenance of the works the Contract Price at the times and in the manner prescribed by the Contract.

IN WITNESS WHEREOF the parties hereto have caused their respective common seals to be hereto affixed (or have hereunto set their respective hands and seals) on the day and year first above written.

SIGNED AND DELIVERED

By the said Employer: ……..
(County Executive, Department of Roads, Transport & Public works)
For and on behalf of the said Employer.

In the presence of: ……..
(Name and Designation of Witness)

……..
(Signature of Witness)

……..
(Address of witness)

By the said Contractor: ……..

In the presence of: ……..
(Name and Designation of Witness)

……..
(Signature of Witness)

……..
(Address of witness)

3.6 PERFORMANCE BANK GUARANTEE (UNCONDITIONAL)

To: COUNTY EXECUTIVE
DEPARTMENTOF ROADS, TRANSPORT,& PUBLIC WORKS
COUNTY GOVERNMENT OF BOMET
P. O. BOX 19-20400
BOMET

Dear Sir,

WHEREAS _____ (hereinafter called "the Contractor") has undertaken, in pursuance of Contract No. **……..** Dated …… to execute **ROUTINE MAINTENANCE OF CHEBOLE-KAPANGOROR-SUMONI-KAPTULWA ROAD (4.5KM)**
TENDER NO: CGB/DR/KRB/006/2020-2021

(Hereinafter called "the Works");

AND WHEREAS it has been stipulated by you in the said Contract that the Contractor shall furnish you with a Bank Guarantee by a recognised bank for the sum specified therein as security for compliance with his obligations in accordance with the Contract;

AND WHEREAS we have agreed to give the Contractor such a Bank Guarantee:

NOW THEREFORE we hereby affirm that we are the Guarantor and responsible to you, on behalf of the Contractor, up to a total of Kshs. _____ (*amount of Guarantee in figures*) Kenya Shillings_____
_____ (*amount of Guarantee in words*), and we undertake to pay you, upon your first written demand and without cavil or argument, any sum or sums within the limits of Kenya Shillings _____
_____ (*amount of Guarantee in words*) as aforesaid without your needing to prove or to show grounds or reasons for your demand for the sum specified therein.

We hereby waive the necessity of your demanding the said debt from the Contractor before presenting us with the demand.

We further agree that no change, addition or other modification of the terms of the Contract or of the Works to be performed there under or of any of the Contract documents which may be made between you and the Contractor shall in any way release us from any liability under this Guarantee, and we hereby waive notice of any change, addition, or modification.

This guarantee shall be valid until the date of issue of the Certificate of Completion.

SIGNATURE AND SEAL OF THE GUARANTOR _____

Name of Bank: _____

Address: _____

Date: _____

3.7 FORM OF LETTER OF NOTIFICATION OF AWARD

CHIEF OFFICER
DEPARTMENTOF ROADS, PUBLIC WORKS & TRANSPORT
COUNTY GOVERNMENT OF BOMET
P. O. BOX 19-20400
BOMET

To: ……..
……..
……..

RE: Bid No. ……..

ROUTINE MAINTENANCE OF CHEBOLE-KAPANGOROR-SUMONI-KAPTULWA ROAD (4.5KM)
TENDER NO: CGB/DR/KRB/006/2020-2021

This is to notify that the contract (s) stated below under the above mentioned Bid have been awarded to you.

…….

…….

…….

This notification of award shall lead to conclusion of a contract between the parties upon the expiry of **14 days from the date of this letter.** Confirmation will be through the signing of the contract agreement between you and the Employer.

This is not an instruction to commence, written instruction on the same will be given to you within **seven days** of signing the contract.

You are therefore required to give a formal written unconditional acceptance of this offer

(FULL PARTICULARS):

CHIEF OFFICER
DEPARTMENTOF ROADS, PUBLIC WORKS & TRANSPORT
COUNTY GOVERNMENT OF BOMET
P. O. BOX 11-20400
BOMET

……
SIGNED FOR CHIEF OFFICER

SCHEDULES OF SUPPLEMENTARY INFORMATION

3.8 BID QUESTIONNAIRE

Please fill in block letters.

1. Full names of Bidder…..…….
   ……..

2. Full address of Bidder to which Bid correspondence is to be sent (unless an agent has been appointed below)……..
   ……..

3. Telephone number (s) of Bidder…….....
   ……..

4. Telex address of Bidder……...…….
   ……..

5. Name of Bidder's representative to be contacted on matters of the Bid during the Bid period……
   ……..

6. Details of Bidder's nominated agent (if any) to receive Bid notices. This is essential if the Bidder does not have his registered address in Kenya (name, address, telephone, telex)…… ROUTINE MAINTENANCE OF CHEBOLE-KAPANGOROR-SUMONI-KAPTULWA ROAD (4.5KM)
   ……..
   ……..
   ……..

   Signature of Bidder ….…….

Make copy and deliver to ***the Chief Officer, Departmentof Roads, Transport & Public works, County Government of Bomet.***

3.9 CONFIDENTIAL BUSINESS QUESTIONNAIRE

You are requested to give the particulars indicated in Part 1 and either Part 2 (a), 2 (b) or 2 (c) and 2 (d) whichever applies to your type of business.

You are advised that it is a serious offence to give false information on this Form.

Part 1 – General:

Business Name: ……...

Location of business premises: ……Country/Town……

Plot No……Street/Road …….

Postal Address……. Tel No……

Nature of Business……...

Current Trade Licence No…… Expiring date……..……..……

Maximum value of business which you can handle at any time: Kshs. ……..

Name of your bankers…….....……..

Branch……

Part 2 (a) – Sole Proprietor:

Your name in full……..…… Age…….

Nationality……..…… Country of Origin……

*Citizenship details ……

Part 2 (b) – Partnership:

Give details of partners as follows:

	Name in full	*Nationality*	**Citizenship Details*	*Shares*
1	……	……..…	……	……
2	……	……	……	……
3	……	……..	……	……

Part 2(c) – Registered Company:

Private or public……

State the nominal and issued capital of the Company

Nominal Kshs……

Issued Kshs……...

Give details of all directors as follows:

	Name in full	*Nationality*	**Citizenship Details*	*Shares*
1	……	……..…	……	……
2	……	……	……	……
3	……	……..	……	……
4	……	……..	……	……

Part 2(d) – Interest in the Firm:

Is there any person/persons in County Government of Bomet who has interest in this firm?

Yes**	

No**	

** Tick (√) to agree as necessary (Compulsory)

I certify that the information given above is correct.

……	……	……
(Title)	*(Signature)*	*(Date)*

** Attach proof of citizenship (Certified Copy of National ID or Passport)* ***(Compulsory)***

** Attach certified copy of Form CR 12* ***(Compulsory)***

3.10 CERTIFICATE OF BIDDER'S VISIT TO SITE

This is to certify that

[*Name/s*]……

……

Being the authorized representative/Agent of [*Name of bidder*]

……

……

Participated in the organised inspection visit of the site of the works for
ROUTINE MAINTENANCE OF CHEBOLE-KAPANGOROR-SUMONI-KAPTULWA ROAD (4.5KM)
TENDER NO: CGB/DR/KRB/006/2020-2021

……..day of……20……..

Signed……..
(Employer's Representative)

……..

…….. ……..
(Name of Employer's Representative) (Designation)

NOTE: This form is to be completed at the time of the organized site visit.

3.11 FORM OF WRITTEN POWER OF ATTORNEY

The Bidder shall state here below the name(s) and address of his representative(s) who is/are authorized to sign the document and receive on his behalf correspondence in connection with the Bid.
(The Bidder consisting of a joint venture shall state here below the name and address of his representative who is authorised to receive on his behalf correspondence in connection with the Bid.)

……..
(Name of Bidder's Representative in block letters)

……..
(Address of Bidder's Representative)

……..
(Signature of Bidder's Representative)

Alternate:

……..
(Name of Bidder's Representative in block letters)

……..
(Address of Bidder's Representative)

……..
(Signature of Bidder's Representative)

*To be filled by all Bidders.

**Both representative and alternate must attach a certified copy of National Identification card or Passport.*

KEY PERSONNEL

DESIGNATION	NAME	NATIONALITY	SUMMARY OF QUALIFICATIONS AND EXPERIENCE		
			Qualifications	General experience (Yrs)	Specific experience (Yrs)
Headquarters: 1. Director 2. 3. Etc.					
Site Office: 1. Site Agent 2. 3. 4. 5. etc.					

Note: The Bidder shall list in this schedule the key personnel he will employ from the Contractor's headquarters and from the Contractor's site office to direct and execute the work together with their qualifications, experience, position held and nationality in accordance with Clause 15.2 and 16.3 of the Conditions of Contract Part II (where required, use separate sheets to add extra data for column 4). Bidders shall attach certified copies of academic certificates, and CVs of all key staff.

I certify that the above information is correct.

…… …… …….
(*Title*) (*Signature*) (*Date*)

3.12 SCHEDULE OF COMPLETED CIVIL WORKS CARRIED OUT BY THE BIDDER IN THE LAST FIVE YEARS

DESCRIPTION OF WORKS AND CLIENT	**TOTAL VALUE OF WORKS (KSHS)***	**CONTRACT PERIOD (YEARS)**	**YEAR COMPLETED**
A. Non-completed Works			
B. Completed Works			
C. Specific Construction Experience			

Note: Bidders shall attach certified copies of letters of award (for each listed project), certified copies of completion certificates or evidence of executed works (for non-completed projects).

I certify that the above Civil Works were successfully carried out and completed by ourselves.

…… …… ……
(*Title*) (*Signature*) (*Date*)

*Value in Kshs. using Central Bank of Kenya mean exchange rate at a reference date 28 days before the date of bid opening.

3.13 SCHEDULE OF PROJECTS CURRENTLY IN PROGRESS

DESCRIPTION OF WORK AND CLIENT	**CONTRACT PERIOD**	**DATE OF COMMENCE-MENT**	**DATE OF COMPLETION**	**TOTAL VALUE OF WORKS (KSHS.)**	**PERCENTAGE COMPLETED TO DATE**

Note:
1. Bidders shall attach certified copies of letters of award (for each listed project) and any certified evidence for executed works e.g copy of recent payment certificate.
2. Bidders must indicate all their on-going works as at the time of bidding. Any non-disclosure shall constitute non-responsiveness)

I certify that the above Civil Works are being carried out by ourselves and that the above information is correct.

…… …… ……
(Title) *(Signature)* *(Date)*

3.14 FINANCIAL STANDING

1 Submit copies of audited profit and loss statements and balance sheet for the last five calendar years and estimated projection for the next two years with certified English translation where appropriate.

2 Give turnover figures for each of the last Three (3) financial years. Quote in millions and decimal thereof.

	Year (2015)	Year (2016)	Year (2017)
	KShs. '000,000	KShs. '000,000	KShs. '000,000
Road works			
Other civil Engineering works			
Other (specify)			
Total			

SUMMARY OF ASSETS AND LIABILTIES OF THE AUDITED FINANCIAL STATEMENTS OF THE LAST THREE (3) FINANCIAL YEARS.

	Year (2015)	Year (2016)	Year (2017)
	KShs. '000,000	KShs. '000,000	KShs. '000,000
1. Total Assets			
2. Current Assets			
3. Bank Credit Line Value			
4. Total Liabilities			
5. Current Liabilities			
6. Net Worth (1-4)			
7. Working capital (2+3-4)			

(a) Name/Address of Commercial Bank providing credit line

……

……

(b) Total amount of credit line KShs……

Attach certified copies of financial bank statements of the last three (3) months.

Attach a certified copy of Undertaking of the Bank to providing the credit.

3.15 OTHER SUPPLEMENTARY INFORMATION

1. Financial reports for the last five years, balance sheets, profit and loss statements, auditors' reports etc. List them below and attach copies.
   ……
   ……
   ……
   ……
   ……
   ……

2. Evidence of access to financial resources to meet the qualification requirements. Cash in hand, lines of credit etc. List below and attach copies of supporting documents
   ……
   ……
   ……
   ……
   ……
   ……

3. Name, address, telephone, telex, fax numbers of the Bidder's Bankers who may provide reference if contacted by the Employer.
   ……
   ……
   ……
   ……
   ……
   ……

4. Information on current litigation in which the Bidder is involved.

OTHER PARTY (IES)	**CAUSE OF DISPUTE**	**AMOUNT INVOLVED (KSHS)**

I certify that the above information is correct.

…… ……..…… ……
(Title) *(Signature)* *(Date)*

3.16 DECLARATION FORM

ROUTINE MAINTENANCE OF CHEBOLE-KAPANGOROR-SUMONI-KAPTULWA ROAD (4.5KM)
TENDER NO: CGB/DR/KRB/006/2020-2021

Date: ……

To: **COUNTY EXECUTIVE**
DEPARTMENTOF ROADS, TRANSPORT & PUBLIC WORKS
COUNTY GOVERNMENT OF BOMET
P. O. BOX 19-20400
BOMET

The Bidder (name and address) ……..
……
……
……
……

Declares the following:

(a) Has not been debarred from participating in public procurement.

(b) Has not been involved in and will not be involved in corrupt and fraudulent practices regarding public procurement.

……	……	……
(*Title*)	(*Signature*)	(*Date*)

Official Stamp: ……..

(To be signed by authorized representative and officially stamped)

3.17 ANTI CORRUPTION DECLARATION / COMMITMENT / PLEDGE FORM

ROUTINE MAINTENANCE OF CHEBOLE-KAPANGOROR-SUMONI-KAPTULWA ROAD (4.5KM)

TENDER NO: CGB/DR/KRB/006/2020-2021

I/We …… of Post Office Box ……. declare that I/ We recognize that Public Procurement is based on a free, fair and competitive tendering process which should not be open to abuse.

I/We …….. Declare that I/We will not offer or facilitate, directly or indirectly, any inducement or reward to any public officer, their relations or business associates, in connection with tender No. ……. for or in the subsequent performance of the contract if I/We am/are successful.

Signed by …… C.E.O. or Authorized Representative.

Name ……..

Designation……..

Signature…….

Date……..

In case of sub-contracting

Signed by …….. CEO of the firm to be subcontracted

Name……

Designation……..

Signature…….

Date……..

SECTION 4: INSTRUCTIONS TO BIDDERS

SECTION 4: INSTRUCTIONS TO BIDDERS

TABLE OF CONTENTS

A. GENERAL 36

1 Scope Of Bid 36
2 Source Of Funds 36
3 Corrupt Practices 36
4 Eligible Bidders 37
5 Qualification Of The Bidder 37
6 One Bid Per Bidder 38
7 Cost Of Bidding 38
8 Site Visit 38

B. BIDDING DOCUMENTS 39

9 Contents of Bidding Documents 39
10 Clarification of Bidding Documents 39
11 Amendment of Bidding Documents 40

C. PREPARATION OF BIDS 40

12 Language of Bid 40
13 Documents Comprising the Bid 40
14 Bid Prices 41
15 Currencies Of Bid And Payment 42
16 Bid Validity 42
17 Bid Security 42
18 No Alternative Offers 43
19 Pre-Bid Meeting 43
20 Format and Signing of Bids 43

D. SUBMISSION OF BIDS 44

21 Sealing and Marking of Bids 44
22 Deadline for Submission of Bids 45
23 Late Bids 45
24 Modification, Substitution and Withdrawal of Bids 45

E. BID OPENING AND EVALUATION 45

25 Bid Opening 46
26 Process to be confidential 46
27 Clarification of bids and contacting of the employer 46
28 Examination of bids and determination of responsiveness 47
29 Correction Of Errors 47
30 Evaluation And Comparison Of Bids 48

F. AWARD OF CONTRACT 51

31 Award 51
32 Employer's Right To Accept Any Bid And To Reject Any Or All Bids 51
33 Notification Of Award 51
34 Signing of agreement 53
35 Performance Security 53
36 Contract Effectiveness 53
37 Advance Payment 53
38 Corrupt And Fraudulent Practices 53

CONDITIONS OF BID AND INSTRUCTIONS TO BIDDERS

A. GENERAL

1 SCOPE OF BID

1.1 The Employer, as defined in the Conditions of Contract Part II hereinafter "the Employer" wishes to receive bids for the construction of works as described in Section 1, clause 101 and 102 of the Special Specifications –"Location and extent of the Works"

1.2 The successful bidder will be expected to complete the Works within the period stated in the Appendix to Bid from the date of commencement of the Works.

1.3 Throughout these bidding documents, the terms bid and BID and their derivatives (bidder/Bidder, bid/Bided, bidding/Bidding etc.) are synonymous, and day means calendar day. Singular also means plural.

2 SOURCE OF FUNDS

2.1 The source of funding is the County Government of Bomet, Kenya (Development Vote)

3 CORRUPT PRACTICES

3.1 The Government requires that the bidders, suppliers, sub-contractors and supervisors observe the highest standard of ethics during the procurement and execution of such contracts. in this pursuit of this policy, the government;

(a) Defines for the purposes of this provision, the terms set forth below as follows:

(i) "corrupt practice" means the offering, giving, receiving, or soliciting of anything of value to influence the action of a public official in the procurement process or in the execution, and

(ii) "fraudulent practice" means a misrepresentation of facts in order to influence a procurement process or the execution of a contract to the detriment of the Employer, and includes collusive practices among bidders (prior to or after bid submission) designed to establish bid prices at artificial, non-competitive levels and to deprive the Employer of the benefits of free and open competition

(b) Will reject a proposal for award if it determines that the Bidder recommended for award has engaged in corrupt or fraudulent practices in competing for the Contract, and

(c) Will declare a firm ineligible, either indefinitely or for a stated period of time, to be awarded a government contract if it at any times determines that the firm has engaged in corrupt or fraudulent practices in competing for, or in executing, a Government financed contract.

4 ELIGIBLE BIDDERS

4.1 This invitation to bid is open to all Bidders who are legally registered or incorporated in the Republic of Kenya as of the time of bid submission. Registration with the National Construction Authority (NCA) in category stated in the invitation of bids.

4.2 Bidders shall not have a conflict of interest. Bidders shall be considered to have conflict of interest, if they participated as a consultant in the preparation of the design, documentation or technical specifications of the works that are the subject of this bidding other than as far as required by the Employer.

4.3 A firm that is under a declaration of ineligibility by the Employer in accordance with clause 3, at the date of submission of the bid or thereafter, shall be disqualified.

4.4 Bidders shall provide such evidence of their continued eligibility satisfactory to the Employer, as the Employer shall reasonably request.

5 QUALIFICATION OF THE BIDDER

5.1 Bidders shall as part of their bid:

(a) Submit a written power of attorney authorizing the signatory of the bid to commit the bidder; and

(b) Update any information submitted with their bids and update in any case the information indicated in the schedules and continue to meet the minimum threshold criteria set out in the bid documents.

5.2 As a minimum, Bidders shall provide latest information set out below:

(a) evidence of access to lines of credit and availability of other financial resources

(b) financial predictions for the current year and the two subsequent years, including the effect of known commitments

(c) current work commitments

(d) current litigation information; and

(e) availability of critical equipment

(f) Availability of key technical personnel

(g) Similar work experience

(h) History of non performing contracts

(i) Details of sub-contractors if any

5.3 Bidders shall also submit proposals of work methods and schedule in sufficient detail to demonstrate the adequacy of the bidder's proposals to meet the technical specifications and the completion time referred to in Clause 1.222.

5.4 In case of a joint venture, the following shall apply:

(a) The bid, and in case of a successful bid, the Form of Agreement, shall be signed so as to be legally binding on all partners.

(b) One of the partners shall be nominated as being in charge, and this authorization shall be evidenced by submitting of a power of attorney signed by legally authorized signatories of all the partners

(c) The partner in charge shall be authorized to incur liabilities and receive instructions for and on behalf of any and all partners of the joint venture and the entire execution of the contract including payment shall be done exclusively with the partner in charge

(d) All partners in a joint venture shall be liable jointly and severally for the execution of the contract in accordance with the contract terms, and a relevant statement to this effect shall be included in the authorization mentioned under (b) above as well as in the Form of Bid and the Form of Agreement (in case of a successful tender)

(e) A copy of the agreement entered into by the joint venture partners shall be submitted with the tender.

6 ONE BID PER BIDDER

6.1 Each bidder shall submit only one bid. A bidder who submits or participates in more than one bid will be disqualified.

7 COST OF BIDDING

7.1 The bidder shall bear all costs associated with the preparation and submission of his bid and the Employer will in no case be responsible or liable for those costs, regardless of the conduct or outcome of the bidding process.

7.2 The tender document in soft may be accessed in our website at www.bomet.go.ke/tenders free of charge.

8 SITE VISIT

8.1 The bidder is informed that **site visit is mandatory** and he/she shall examine the Site of Works and its surroundings and obtain for himself all information that may be necessary for preparing the bid and entering into a contract for construction of the Works. **The bidder's representative at this pre-bid site visit MUST be professionally qualified in the field of Civil Engineering**. The Employer will not recognise representation by such people as clerks, secretaries or drivers. The costs of visiting the site shall be at the bidder's own expense.

8.2 The bidder and any of his personnel or agents will be granted permission by the Employer to enter its premises and lands for the purpose of such inspection, but only on the express condition that the bidder, its personnel and agents, will release and indemnify the Employer and its personnel and agents from and against all liability in respect thereof, and will be responsible for personal injury (whether fatal or otherwise), loss of or damage to property and

any other loss, damage, costs and expenses however caused, which but for the exercise of such permission would not have arisen.

8.3 The Employer will conduct a Site Visit concurrently with the pre-bid meeting referred to in Clause 19, attendance for which is **mandatory for all bidders. Failure to attend the site visit by any bidder will lead to disqualification of his /her bid. The date, time and venue of the site visit shall be the date, time and venue indicated in the Tender Notice, or any subsequent Addenda as the case may be**.

B. BIDDING DOCUMENTS

9 CONTENTS OF BIDDING DOCUMENTS

9.1 The set of documents comprising the BID includes the following together with any addenda issued in accordance with Clause 11:

(a) Invitation to Bid/Tender notice
(b) Instructions to bidders
(c) Qualification Criteria
(d) Conditions of Contract - Part II
(e) Conditions of Contract - Part I
(f) Standard Specifications
(g) Special Specifications
(h) Form of Bid, Appendix to Form of Bid and Bid Security
(i) Bills of Quantities
(j) Schedules of Supplementary information
(k) Form of Contract Agreement
(l) Form of Performance Security
(m) Drawings
(n) BID addenda (BID notices)
(o) Confidential Business Questionnaire
(p) Details of Sub-contractors

10 CLARIFICATION OF BIDDING DOCUMENTS

10.1 The prospective bidder requiring any clarification of the bidding documents may notify the Employer in writing at the Employer's mailing address indicated in the Bidding Data.

10.2 The Employer will respond in writing to any request for clarification that he receives earlier than 7 days prior to the deadline for the submission of bids. Copies of the Employer's response to queries raised by bidders (including an explanation of the query but without identifying the sources of the inquiry) will be sent to all prospective bidders who will have downloaded the bidding documents.

11 AMENDMENT OF BIDDING DOCUMENTS

11.1 At any time prior to the deadline for submission of bids, the Employer may, for any reason, whether at his own initiative or in response to a clarification requested by a prospective bidder, modify the bidding documents by issuing subsequent Addenda.

11.2 The Addendum thus issued shall be part of the bidding documents pursuant to Sub-Clause 10.1 and shall be communicated in writing to all purchasers of the bidding documents and will be binding upon them. Prospective bidders shall promptly acknowledge receipt of each Addendum in writing to the Employer.

11.3 In order to afford prospective bidders reasonable time in which to take an Addendum into account in preparing their bids, the Employer may, at his discretion, extend the deadline for the submission of bids in accordance with Clause 1.2.

C. PREPARATION OF BIDS

12 LANGUAGE OF BID

12.1 The bid prepared by the bidder and all correspondences and documents relating to the bid exchanged by the bidder and the Employer shall be written in the English Language. Supporting documents and printed literature furnished by the bidder may be in another language provided they are accompanied by an appropriate translation of pertinent passages in the above stated language. For the purpose of interpretation of the bid, the English language shall prevail.

13 DOCUMENTS COMPRISING THE BID

13.1 The bid to be prepared by the bidder shall comprise:

(a) Duly filled-in Form of Bid and Appendix to form of bid;
(b) Bid security;
(c) Priced Bills of Quantities;
(d) Schedules of information;
(e) Qualification Criteria;
(f) Any other materials required to be completed and submitted in accordance with the Instructions to Bidders embodied in these bidding documents.

13.2 These Forms, Bills of Quantities and Schedules provided in these bidding documents shall be used without exception (subject to extensions of the Schedules in the same format).

14 BID PRICES

14.1 Unless explicitly stated otherwise in the bidding documents, the contract shall be for the whole works as described in Sub-Clause 1.11.1, based on the basic unit rates and prices in the Bill of Quantities submitted by the bidder.

14.2 All the insertions made by the bidder shall be made in INK and the bidder shall clearly form the figures. The relevant space in the form of bid and bills of quantities shall be completed accordingly without interlineations or erasures except those necessary to correct errors made by the bidder in which case the erasures and interlineations shall be initialled by the person(s) signing the bid.

14.3 The bidder shall fill in rates and prices for all items of Works described in the Bills of Quantities, whether quantities are stated or not. Items against which no rate of price is entered by the tenderer will not be paid for by the employer when executed and shall be deemed covered by the rates for other items and prices in the Bills of Quantities.

The prices and unit rates in the Bills of Quantities are to be the full (all inclusive) value of the work described under the items, including all costs and expenses which may be necessary and all general risks, liabilities and obligations set forth or implied in the documents on which the tender is based. All duties, taxes and other levies payable by the contractor under the contract, or for any other cause prior to the deadline for the submission of tenders, shall be included in the rates and prices and the total tender price submitted by the bidder.

Each price or unit rate inserted in the Bill of Quantities should be a realistic estimate for completing the activity or activities described under that particular item and the bidder is advised against inserting a price or rate against any item contrary to this instruction.

Every rate entered in the Bill of Quantities, whether or not such a rate is associated with the quantity, shall form part of the contract. The employer shall have the right to call for any item of work contained in the Bills of Quantities, and such items of work to be paid for at the rate entered by the bidder and it is the intention of the Employer to take full advantage of the unbalanced low rates.

14.4 All duties, taxes (excluding VAT) and other levies payable by the Contractor under the Contract, or for any other cause as of the date 28 days prior to the deadline for submission of bids, shall be included in the rates and prices and the total Bid Price submitted by the bidder.

14.5 Unless otherwise provided in the Bidding Data and Conditions of Particular Application, the rates and prices quoted by the bidder are subject to adjustment during the performance of the contract in accordance with the provisions of Clause 70 of the Conditions of Contract. The bidder shall furnish with his bid written confirmation from his suppliers or manufacturers of basic unit rates for the supply of items listed in the Conditions of Contract clause 70 where appropriate. The Employer may require the bidder to justify such rates so obtained from the suppliers or manufacturers.

15 CURRENCIES OF BID AND PAYMENT

15.1 Bids shall be priced in Kenya Shillings.

16 BID VALIDITY

16.1 The bid shall remain valid and open for acceptance for a period of **120 days** from the specified date of bid opening specified in Clause 22 or from the extended date of tender opening, whichever is later.

16.2 In exceptional circumstances prior to expiry of the original bid validity period, the Employer may request that the bidders extend the period of validity for a specified additional period. The request and the responses thereto shall be made in writing or by cable. A bidder may refuse the request without forfeiting his bid security. A bidder agreeing to the request will not be required nor permitted to modify his bid, but will be required to extend the validity of his bid security for the period of the extension, and in compliance with Clause 17 in all respects.

17 BID SECURITY

17.1 The bidder shall furnish, as part of his bid, a bid security in the amount shown in the **Appendix to Form of Bid.**

17.2 The bid security shall be in the form of unconditional bank guarantee from a reputable bank selected by the bidder and located in Kenya (Insurance bonds shall not be accepted). The format of the bank guarantee shall be in accordance with bid security included in Section 1. The bid security shall remain valid for a period of 30 days beyond the original validity period for the bid, and beyond any period of extension subsequently requested under Sub-Clause 16.2.

17.3 Any bid not accompanied by an acceptable bid security will be rejected by the Employer as non-responsive.

17.4 The bid securities of unsuccessful bidders will be discharged/ returned as promptly as possible, but not later than 28 days after the expiration of the period of bid security validity.

17.5 The bid security of the successful bidder will be discharged upon the bidder signing the Contract Agreement and furnishing the required performance security.

17.6 The bid security may be forfeited:

(a) if a bidder withdraws his bid, except as provided in Sub-Clause 24.2.

(b) if the bidder does not accept the correction of any errors, pursuant to Clause 29 or in accordance with Sub-Clause 28.2 or

(c) in the case of a successful bidder, if he fails within the specified time limit to:

1. sign the Contract Agreement or
2. furnish the necessary performance security

18 NO ALTERNATIVE OFFERS

18.1 The bidder shall submit one offer, which complies fully with the requirements of the bidding documents unless otherwise provided in the appendix.

18.2 The bid submitted shall be solely on behalf of the bidder and only one bid may be submitted by each bidder either by himself or as a partner in a joint venture. A bidder who submits or participates in more than one bid will be disqualified.

18.3 A price or rate shall be entered in indelible ink against every item in the Bills of Quantities with the exception of items which already have Prime Cost or Provisional sums affixed thereto. The bidders are reminded that no "nil" or "included" rates or "lump-sum" discounts will be accepted. The rates for various items should include discounts if any. Bidders who fail to comply will be disqualified.

18.4 A bidder shall not attach any conditions of his own to his bid. The bid price must be based on the bid documents. The bidder is not required to present alternative construction options and he shall **use without exception, the Bills of Quantities as provided,** with the amendments as notified in the tender notices, if any, for the calculation of the bid price. Any bidder who fails to comply with the clause will be disqualified.

19 PRE-BID MEETING

19.1 The bidders designated representative and who must be one of the technical persons listed as a key staff in Schedule No. 5 is invited to attend a pre-bid meeting, which will take place at the **venue, date and time indicated in the Tender Notice, or any subsequent Addenda as the case may be.** The purpose of the meeting will be to clarify issues and to answer questions on any matter that may be raised at that stage.

19.2 The bidder is requested as far as possible to submit any questions in writing or by cable, to reach the Employer not later than one week before the meeting. It may not be practicable at the meeting to answer questions received late, but questions and responses will be transmitted in accordance with the Minutes of the meeting, including the text of the questions raised and the responses given together with any responses prepared after the meeting, will be transmitted without delay to all purchasers of the bidding documents. Any modification of the bidding documents listed in Sub-Clause 8.1, which may become necessary as a result of the pre-bid meeting shall be made by the Employer exclusively through the issue of an Addendum pursuant to Clause 10 or through the minutes of the pre-bid meeting.

19.3 Non-attendance at the pre-bid meeting by a Bidder will be a cause for disqualification of his BID.

20 FORMAT AND SIGNING OF BIDS

20.1 The bidder shall prepare one (1) original of the documents comprising the bid as described in Clause 13 of these Instructions to Bidders, bound with the section containing the Form of Bid and Appendix to Bid, and clearly marked **"ORIGINAL".** In addition, the bidder shall submit two (2) replica copies of the bid clearly marked **"COPIES".** In the event of discrepancy between them, the original shall prevail.

20.2 The original and copies of the bid shall be typed or written in indelible ink (in the case of copies, photocopies are also acceptable) and shall be signed by a person or persons duly authorized to sign on behalf of the bidder pursuant to Sub-Clause 5.1(a). The person or persons signing the bid shall initial all pages of the bid where entries or amendments have been made.

20.3 The bid shall be without alterations, omissions or conditions except as necessary to correct errors made by the bidder, in which case such corrections shall be initialled by the person or persons signing the bid. Non-initialization shall constitute non-responsiveness

20.4 The bid shall serialize all pages of the document using indelible ink. **Non-serialization shall constitute non-responsiveness.**

D. SUBMISSION OF BIDS

21 SEALING AND MARKING OF BIDS

21.1 The bidder shall seal the original and each copy of the bid in separate envelopes duly marking the envelopes **"ORIGINAL"** and **"COPY".** The envelopes shall then be sealed in an outer separate envelope.

21.2 The inner and outer envelopes shall:

(a) be addressed to the Employer at the address provided in the Appendix to Form of Bid.

(b) bear the name and identification number of the contract. In addition to the identification required in sub-Clause 21.1, the inner envelopes shall indicate the name and address of the bidder to enable the bid to be returned unopened in case it is declared "late" pursuant to Clause 23.1, and for matching purposes under Clause 24.

(c) Provide a warning not to open before the time and date for bid opening, as specified in the Bidding Data.

21.3 If the outer envelope is not sealed and marked as instructed above, the Employer will assume no responsibility for the misplacement or premature opening of the bid. A bid opened prematurely for this cause will be rejected by the Employer and returned to the bidder.

22 DEADLINE FOR SUBMISSION OF BIDS

22.1 Bids must be received by the Employer at the address specified in Sub Clause 21.2 not later than **the time and date indicated in the Tender Notice or any subsequent Addenda as the case may be**.

22.2 Bids delivered by hand must be placed in the 'tender box' provided in the office of the employer

22.3 Proof of posting will not be accepted as proof of delivery and any bid delivered after the above stipulated time, from whatever cause arising will not be considered.

22.4 The Employer may, at his discretion, extend the deadline for the submission of bids through the issue of an Addendum in accordance with Clause 11 in which case all rights and obligations of the Employer and the bidders previously subject to the original deadline shall thereafter be subject to the new deadline as extended.

23 LATE BIDS

23.1 Any bid received by the Employer after the deadline for submission of bids prescribed in Clause 22 will be returned unopened to the bidder.

24 MODIFICATION, SUBSTITUTION AND WITHDRAWAL OF BIDS

24.1 The bidder may modify, substitute or withdraw his bid after bid submission, provided that written notice of modification or withdrawal is received by the Employer prior to the prescribed deadline for submission of bids.

24.2 The bidder's modification, substitution or withdrawal notice shall be prepared, sealed, marked and delivered in accordance with the provisions of Clause 21, with the outer and inner envelopes additionally marked **"MODIFICATION"** or **"WITHDRAWAL"** as appropriate.

24.3 No bid may be modified subsequent to the deadline for submission of bids, except in accordance with Sub-Clause 28.1.

24.4 Any withdrawal of a bid during the interval between the deadline for submission of bids and expiration of the period of bid validity specified in Clause 17 may result in the forfeiture of the bid security pursuant to Sub-Clause 17.6.

E. BID OPENING AND EVALUATION

25 BID OPENING

25.1 The Employer will open the bids, including withdrawals and modifications made pursuant to Clause 24, in the presence of bidders' designated representatives who choose to attend, **the time and date indicated in the Tender Notice or any subsequent Addenda as the case may be**. The bidders' representatives who are present shall sign a register evidencing their attendance.

25.2 Envelopes marked "**WITHDRAWAL**" and "**SUBSTITUTION**" shall be opened first and the name of the bidder shall be read out. Bids for which an acceptable notice of withdrawal has been submitted pursuant to Clause 24 shall not be opened.

25.3 The bidder's name, the Bid Prices, including any bid modifications and withdrawals, the presence (or absence) of bid security, and any such details as the Employer may consider appropriate, will be announced by the Employer at the opening. Subsequently, all envelopes marked "**MODIFICATION**" shall be opened and the submissions therein read out in appropriate detail. No bid shall be rejected at bid opening except for late bids pursuant to Clause 23.

25.4 The Employer shall prepare minutes of the bid opening, including the information disclosed to those present in accordance with Sub-Clause 25.3.

25.5 Bids not opened and read out at bid opening shall not be considered further for evaluation, irrespective of the circumstances.

26 PROCESS TO BE CONFIDENTIAL

26.1 Information relating to the examination, evaluation and comparison of bids, and recommendations for the award of contract shall not be disclosed to bidders or any other persons not officially concerned with such process until the award to the successful bidder has been announced. Any effort by a bidder to influence the Employer's processing of bids or award decisions may result in the rejection of the bidder's bid.

27 CLARIFICATION OF BIDS AND CONTACTING OF THE EMPLOYER

27.1 To assist in the examination, evaluation, and comparison of bids, the Employer may, at his discretion, ask any bidder for clarification of their bid, including breakdowns of unit rates. The request for clarification and the response shall be in writing or by cable, but no change in the price or substance of the bid shall be sought, offered, or permitted except as required to confirm the correction of arithmetic errors discovered by the Employer in the evaluation of the bids in accordance with Clause 28.

27.2 Subject to Sub-Clause 26.1, no bidder shall contact the Employer on any matter relating to its bid from the time of the bid opening to the time the contract is awarded. If the bidder wishes to bring additional information to the notice of the Employer, it should do so in writing.

27.3 Any effort by the bidder to influence the Employer in the Employer's bid evaluation, bid comparison or contract award decisions may result in the rejection of the bidder's bid.

28 EXAMINATION OF BIDS AND DETERMINATION OF RESPONSIVENESS

28.1 Prior to the detailed evaluation of bids, the Employer will determine whether each bid (a) has been properly signed; (b) is accompanied by the required securities; (c) is substantially responsive to the requirements of the bidding documents; and (d) provides any clarification and/or substantiation that the Employer may require to determine responsiveness pursuant to Sub-Clause 28.2.

28.2 A substantially responsive bid is one that conforms to all the terms, conditions, and specifications of the bidding documents without material deviation or reservation and has a valid BID bank guarantee. A material deviation or reservation is one (a) which affects in any substantial way the scope, quality, or performance of the works; (b) which limits in any substantial way, inconsistent with the bidding documents, the Employer's rights or the bidder's obligations under the contract; or (c) whose rectification would affect unfairly the competitive position of other bidders presenting substantially responsive bids.

28.3 Each price of unit rate inserted in the Bills of Quantities shall be a realistic estimate of the cost of completing the works, described under the particular item including allowance for overheads, profits and the like. Should a tender be seriously unbalanced in relation to the Employer’s estimate of the works to be performed under any item or groups of items, the tender shall be deemed not responsive.

28.4 If a bid is not substantially responsive, it will be rejected by the Employer and may not subsequently be made responsive by correction or withdrawal of the nonconforming deviation or reservation.

29 CORRECTION OF ERRORS

29.1 Bids determined to be substantially responsive will be checked by the Employer for any arithmetic errors in the computations and summations. Errors will be corrected by the Employer as follows:

(a) Where there is a discrepancy between the amounts in figures and in words, the amount in words as indicated in the Form of Bid will govern;

(b) Where there is a discrepancy between the unit rate and the line item total resulting from multiplying the unit rate by the quantity, the unit rate as quoted will prevail, unless in the opinion of the Employer, there is an obvious typographical error, in which case adjustment will be made to the entry containing the error.

(c) In the event of a discrepancy between the bid amount as stated in the Form of Bid and the corrected bid figure in the main summary of the Bills of Quantities, the amount as stated in the form of bid shall prevail.

(d) The error correction factor shall be computed by expressing the difference between the bid amount and the corrected bid sum as a percentage of the corrected contractor's work (i.e. corrected tender sum less prime cost and Provisional sums)

(e) The error correction factor shall be applied to all the contractor's work (as a rebate or addition as the case may be) for the purposes of valuations for interim certificates and valuations of variations

(f) The bid will be adjusted in accordance with the above procedure for the correction of errors and, with concurrence of the bidder, and shall be considered as binding upon the bidder. If the bidder does not accept the corrections, the bid may be rejected and the Bid Security may be forfeited in accordance with clause 17.

29.2 Any error by the Bidder in pricing or extending the Bills of Quantities or carrying forward to the summary or BID Sum, shall be corrected in such a way that the BID Sum remains unaltered and the Bidder shall within seven (7) days after issuance of the written notice by the Employer, or such further time as the Employer may allow, correct his BID in such a manner as may be agreed or directed by the Employer failing which the BID may be absolutely rejected and the Bid Security forfeited in accordance with Sub-Clause 17.6.

30 EVALUATION AND COMPARISON OF BIDS

30.1 The Employer will then evaluate and compare only the bids determined to be substantially responsive in accordance with Clauses 27 and 28.

30.2 In evaluating bids, the employer will determine for each bid the evaluated bid price by adjusting the bid price as follows

(a) Making any correction of errors pursuant to clause 29

(b) excluding provisional sums and provision, if any, for contingencies in the bills of Quantities, but including Dayworks where priced competitively

30.3 The Employer reserves the right to accept any variation, deviation or alternative offer other factors which are in excess of the requirements of the bid documents or otherwise result in the accrual of unsolicited benefits to the Employer, shall not be taken into account in tender evaluation.

30.4 Price adjustment provisions in the Conditions of Contract applied over the period of execution of the contract shall not be taken into account in the bid evaluation.

30.5 Preference where allowed in the evaluation of bids shall not exceed 15%

30.6 The procuring entity may at any time terminate procurement proceedings before contract award and shall not be liable to any person for the termination.

30.7 The procuring entity shall give prompt notice for the termination to the bidders and on request give its reasons for termination within 14days of receiving the request from any bidder.

30.8 A bidder who gives false information in the bid document about his qualification of who refuses to enter into a contract after notification of award shall be considered for debarment from participating in future public procurement.

30.9 If the bid, which results in the lowest Evaluated Bid Price is seriously unbalanced or front loaded in relation to the Engineer's estimate of the items of work to be performed under the contract, the Employer may require the bidder to produce detailed price analyses for any or all items of the Bills of Quantities, to demonstrate the internal consistency of those prices with the construction methods and schedule proposed. After evaluation of the price analyses, taking into consideration the schedule of estimated contract payments, the Employer may require that the amount of the Performance Security set forth in Clause 35 be increased at the expense of the bidder to a level sufficient to protect the Employer against financial loss in the event of default of the successful bidder under the contract.

30.10 There will be preference for domestic bidders in accordance with section 39 (8) of the Public Procurement and Disposal Act, 2005 and section 28 of the Public Procurement and Disposal Regulations, 2006 all of the Laws of Kenya.

30.11 Poor past performance of the bidder shall be used as an evaluation criteria in accordance with section 5: *Qualification criteria*.

31 QUALIFICATION AND EVALUATION CRITERIA

31.1 Post-qualification will be based on meeting all of the following minimum point scale criteria regarding the Applicant’s general and particular experience, personnel and equipment capabilities as well as financial position. The Employer reserves the right to waive minor deviations, if they do not materially affect the capacity of an applicant to perform the contract. Subcontractor’s experience and resources shall not be taken into account in determining the Applicant’s compliance with qualifying criteria.

31.2 General Experience.

The Applicant shall meet the following minimum criteria: -

(a) Average annual turnover for the last 2 years - KShs. 3,000,000.00/-.

(b) Successful completion as a prime contractor or sub-contractor in the execution of at least three roads rehabilitation/new construction projects of a similar nature and

comparable in complexity to the proposed contract within the last three years, for which at least one was located in an urban environment in Kenya.

31.3 Personnel Capabilities. The Applicant should list down personnel of minimum qualification of Bsc in Civil Engineering (Registered with Engineer's Board of Kenya as a professional Engineer) for Site Agent, Ordinary Diploma for the surveyor and an Ordinary Diploma in Civil Engineering for other supervisory staff.

31.4 Equipment Capabilities. The Applicant should list down, the plants and equipment that are in his ownership and the ones proposed for hire which should be suitable for executing contract works. – Applicants must attaché evidence of ownership or hiring arrangements.

31.5 Cash flow statement. The Applicant should demonstrate that he has access to or has available, liquid assets, unencumbered real assets, lines or credit, and other financial means sufficient to meet the construction cash flow for a period of 2 months, estimated at 20% of the estimated tender sum.

31.6 Balance Sheets. Signed and stamped Audited balance sheets for the last two years should be submitted and must demonstrate the soundness of the Applicant's financial position, availability of working capital and net worth

31.7 Financial position/Ratios. The applicant's financial information will be assessed in terms of ROCE, current ratio and return on equity, and the point scale criteria on their financial position given on this basis. Where necessary, the Employer may make inquiries with the Applicant's bankers.

31.8 Litigation History. The Applicant should provide accurate information on any litigation or arbitration resulting from contracts complete or under execution by him over the last five years. A consistent history of litigation against the Applicant may result in failure of the application.

31.9 Post-qualification criteria are as provided in the Appendix to instruction to tenderers.

The pass mark shall be **75%.**
The bidders who pass the technical criteria will be subjected to financial evaluation.

F. FINANCIAL EVALUATION

32 COMPARISON OF MAJOR RATES OF ITEMS OF CONSTRUCTION & CREDIBILITY OF TENDERERS RATES

The Employer will compare the tenderers' rates with the Engineer's estimates for major items of construction. If some bids are seriously unbalanced or front loaded in relation to the Engineer's estimates for the major items of work to be performed under the contract, the Employer may require the bidder to produce detailed price analyses for any or all items of the Bills of Quantities, to demonstrate the internal consistency of those prices with the construction methods and schedule proposed. After evaluation of the price analyses, taking into consideration the schedule of estimated contract payments, the Employer may require that the amount of the Performance Security set forth in Clause 35 be increased at the expense of the bidder to a level sufficient to protect the Employer against financial loss in the event of default of the successful bidder under the contract.

33 PREFERENCE FOR DOMESTIC BIDDERS

This will not be applicable for this bid.

G. AWARD OF CONTRACT

34 AWARD

34.1 Subject to Clause 32, the Employer will award the contract to the bidder whose bid has been determined to be substantially responsive to the bidding documents and who has offered the lowest Evaluated Bid Price pursuant to Clause 29, provided that such bidder has been determined to be (a) eligible in accordance with the provisions of Sub-Clause 4.1, and (b) qualified in accordance with the provisions of Clause 5.

35 EMPLOYER'S RIGHT TO ACCEPT ANY BID AND TO REJECT ANY OR ALL BIDS

35.1 The Employer reserves the right to accept or reject any bid, and to annul the bidding process and reject all bids, at any time prior to award of contract, without thereby incurring any liability to the affected bidder or bidders or any obligation to inform the affected bidder or bidders of the grounds for the Employer's action.

36 NOTIFICATION OF AWARD

36.1 Prior to expiration of the period of bid validity prescribed by the Employer, the Employer will notify the successful bidder in writing or by cable confirmed by registered letter that its bid has been accepted. This letter (hereinafter and in the Conditions of Contract called "**Letter of**

Acceptance") shall specify the sum, which the Employer will pay the Contractor in consideration of the execution and completion of the works and the remedying of any defects therein by the Contractor as prescribed by the contract (hereinafter and in the Conditions of Contract called "the Contract Price").

36.2 At the same time that the Employer notifies the successful bidder that his bid has been accepted, the Employer shall notify the other bidders that their bids have been unsuccessful and that their bid securities will be returned as promptly as possible, in accordance with sub-clause 17.4.

37 SIGNING OF AGREEMENT

37.1 At the same time that the Employer notifies the successful bidder that its bid has been accepted, the Employer will send the bidder the Agreement in the form provided in the bidding documents, incorporating all agreements between the parties.

37.2 Within 14 days of receipt of the form of contract agreement from the employer, the successful bidder shall sign the form and return it to the employer together with the required performance security.

37.3 The parties to the contract shall have it signed within 30days from the date of notification of contract award unless there is an administrative review request.

38 PERFORMANCE SECURITY

38.1 Within twenty eight (28) days of receipt of the notification of award from the Employer, the successful bidder shall furnish the Employer with a performance security in the form stipulated in the Conditions of contract. The form of performance security provided in Section 9 of the bidding documents shall be used.

38.2 The successful bidder shall provide a performance security in the form of an Unconditional Bank Guarantee from a reputable bank approved by the employer and located in Kenya.

38.3 Failure by the successful Bidder to lodge the required Performance Guarantee shall constitute a breach of contract and sufficient grounds for the **annulment of the Award and forfeiture of the Bid Surety**; in which event the Employer may make the award to the next ranked bidder or call for new bids.

39 CONTRACT EFFECTIVENESS

39.1 The Contract will be effective only upon signature of the Agreement between the Contractor and the Employer.

40 ADVANCE PAYMENT

40.1 An advance payment, if approved by the Employer, shall be made under the contract, if requested by the contractor, in accordance with clause 60(1) of the conditions of contract. The advance payment guarantee shall be denominated in Kenya Shillings.

41 CORRUPT AND FRAUDULENT PRACTICES

41.1 The procuring entity requires that bidders observe the highest standard of ethics during the procurement process and execution of contracts. A bidder shall sign a declaration that he has not and will not be involved in corrupt or fraudulent practices.

SECTION 5: QUALIFICATION CRITERIA

SECTION 5: QUALIFICATION CRITERIA

This Section contains all the factors, methods and criteria that the Employer shall use to evaluate applications. The information to be provided in relation to each factor and the definitions of the corresponding terms are included in the respective Application Forms.

Contents

5.1 ELIGIBILITY 56

5.2 HISTORICAL CONTRACT NON-PERFORMANCE 57

5.3 FINANCIAL SITUATION 58

5.4 EXPERIENCE 59

5.5 CURRENT COMMITMENTS 60

5.6 PERSONNEL CAPABILITY 60

5.7 SCHEDULE OF THE MAJOR ITEMS OF PLANT TO BE USED ON THE PROPOSED CONTRACT. 63

No.	Subject	Requirement	Single Entity	Joint Venture			Submission Requirements
				All Parties Combined	Each Party	One Party	
5.1	Eligibility						
5.1.1	**Nationality**	Nationality in accordance with ITB Subclause 3.2.	Must meet requirement	Existing or intended JV must meet requirement	Must meet requirement	N / A	Section 3, Clause 31
5.1.2	**Conflict of interest**	No conflicts of interest as described in ITB Subclause 3.1(a) i & ii	Must meet requirement	Existing or intended JV must meet requirement	Must meet requirement	N / A	Section 3, Clause 31
5.1.3	**Employer Ineligibility**	Not having been declared ineligible by the Employer, as described in Subclause 3.1(a) i & ii	Must meet requirement	Existing JV must meet requirement	Must meet requirement	N / A	Section 3, Clause 31
5.1.4	**Incorporation & Registration**	Applicant required to meet conditions of ITB Clause 4. Pursuant to Clause 4, the following shall be submitted; Certified copies of; ▪ Certificate of Incorporation to show that the applicant is a registered company and legally authorized to do business in Kenya. ▪ - Proof of registration with the National Construction Authority as per tender notice ▪ Tax Compliance Certificate (Valid) ▪ VAT Registration	Must meet requirement	Must meet requirement	Must meet requirement	N / A	Section 3, Clause 31

No.	Subject	Requirement	Single Entity	Joint Venture			Submission Requirements
				All Parties Combined	Each Party	One Party	
		Certificate ▪ PIN number					
5.2	Historical Contract Non-Performance						
5.2.1	**History of Non-Performing Contracts**	Non-performance of a contract did not occur within the last three (3) years prior to the deadline for application submission based on all information on fully settled disputes or litigation. A fully settled dispute or litigation is one that has been resolved in accordance with the Dispute Resolution Mechanism under the respective contract, and where all appeal instances available to the applicant have been exhausted.	Must meet requirement by itself or as party to past or existing JV	N / A	Must meet requirement by itself or as party to past or existing JV	N / A	Section 3, Clause 31
5.2.2	**Pending Litigation**	All pending litigation shall in total not represent **more than Fifty percent (50%)** of the Applicant's net worth and shall be treated as resolved against the Applicant. The applicant to provide Sworn affidavit.	Must meet requirement by itself or as party to past or existing JV	N / A	Must meet requirement by itself or as party to past or existing JV	N / A	Section 3, Clause 31

No.	Subject	Requirement	Single Entity	Joint Venture			Submission Requirements
				All Parties Combined	Each Party	One Party	
5.3	Financial Situation						
5.3.1	**Financial Performance**	(a) Submission of audited financial statements or if not required by the law of the applicant's country, other financial statements acceptable to the Employer, for the last two [2] years to demonstrate: (b) The current soundness of the applicants financial position and its prospective long term profitability, and (c) Capacity to have and meet the construction cash flow equivalent to 20% of the tender sum (d) Bank statements for three (3) months for the period of three months ending at most one (1) week from the date of tender opening.	(a) Score • 0-6 Marks (b) Score • 0-4 Marks (c) Score • 0-5 Marks (d) Score • 0-5 Marks	(a) N / A (b) N / A (c) Score • 0-5 Marks (d) Score • 0-5 Marks	(a) Score • 0-6 Marks (b) Score • 0-6 Marks (c) N / A (d) N / A	(a) N / A (b) N / A (b) N / A	Section 3, Clause 31 (a) All pages must be initialized and stamped by both a practicing Auditor registered with ICPAC and one of the Directors. Auditor's practicing membership number from ICPAC must be indicated.
5.3.2	**Average Annual Construction Turnover**	Minimum average annual construction turnover calculated as total certified payments received for contracts in progress or completed, within the last Two (2) years: **KShs. 200 Million**	Score • 0-5 Marks	N/A	Score • 0-5 Marks	N/A	Section 3, Clause 31

No.	Subject	Requirement	Single Entity	Joint Venture			Submission Requirements
				All Parties Combined	Each Party	One Party	
5.4	Experience						
5.4.1	**General Construction Experience**	Experience under construction contracts in the role of contractor, subcontractor, or management contractor for at least the **last three (3) years** prior to the applications submission deadline and with activity in at least six (6) months in each year	Score • 0-5 Marks	N / A	Score • 0-5 Marks	N / A	Section 3, Clause 31
5.4.2	**Specific Construction Experience**	Participation as contractor, management contractor or subcontractor, in at least **two (2) contracts** within the last **three (3) years** each with a value of at least **Kshs. 3 Million (Three),** that have been successfully and substantially completed and that are similar to the proposed works. The similarity shall be based on the physical size, complexity, methods/technology or other characteristics as described in Section 8, Special Specification	Score • 0-15 Marks	N / A	Score • 0-15 Marks	N / A	Section 3, Clause 31
5.4.3	**Work Methodogy**	Submission of a brief work methodology in accordance with sub-clause 5.3	Score • 0-6 Marks	Score • 0-6 Marks	N / A	N / A	Give a brief description of how you intend to carry out the work including traffic management and quality assurance of works, in not less than three (3) pages and not more than five (5) pages (typed, font 12 and single spaced).

No.		Subject	Requirement	Single Entity	Joint Venture			Submission Requirements
					All Parties Combined	Each Party	One Party	
		5.5 Current Commitments						
5.5.1		On-going contracts	The total value of outstanding works on the on-going contracts must not exceed the average annual turnover for the last two years.	Score • 0-5 Marks	N/A	Score • 0-5 Marks	N/A	Section 3, Clause 31
		5.6 Personnel Capability						
5.6.1			The site staff shall possess minimum levels set below *NB: Attachment of CVs and certified copies of Annual Practicing Licenses (for Engineers) and Academic Certificates for all staff is mandatory;*					
(a)		Site Agent	Qualification: BSc. Civil Eng and/or equivalent Be Registered Eng. by EBK as a professional engineer. General Experience: 10 years Specific Experience in similar works: 7 years Specific Experience as manager of similar works: 3 years	Score 4 marks 2 marks	N/A	Score 4 marks 2 marks	N/A	Section 3, Clause 31

No.		Subject	Requirement	Single Entity	Joint Venture			Submission Requirements
					All Parties Combined	Each Party	One Party	
(b)		Deputy Site Agent / Site Engineer	Qualification: B.Sc. Civil Eng and/or equivalent Be Registered by EBK as a graduate engineer. General Experience: 8 years Specific Experience in similar works: 5 years	Score 4 marks 2 marks	N/A	Score 4 marks 2 marks	N/A	Section 3, Clause 31
(c)		Site Surveyor	Qualification: Diploma in Surveying General Experience: 7 years Specific Experience in similar works: 5 years	Score 3 marks 2 marks	N/A	Score 3 marks 2 marks	N/A	Section 3, Clause 31
(d)		Foremen	Qualification: Diploma in Civil Engineering. General Experience: 7 years Specific Experience in similar works: 5 years	Score 2 marks 1 marks	N/A	Score 2 marks 1 marks	N/A	Section 3, Clause 31
(e)		Materials Technologist	Qualification = Dip. Civil Eng General Experience = 6 yrs Specific Experience = 4 Yrs	Score 2 marks 1 marks	N/A	Score 2 marks 1 marks	N/A	Section 3, Clause 31

BIDDERS ARE INFORMED THAT APART FROM THE ABOVE THEY MUST MEET THE REQUIREMENTS OF THE PUBLIC PROCUREMENT AND DISPOSAL ACT, 2015.

Clauses 14.1 and 14.2

The currency of the bid shall be Kenya Shillings

Clause 17.1

There will be no alternative times for completion.

Clause 19.1

The number of replica copies of the bid to accompany the original shall be two (2).

Clauses 29.2 (a) and 29.2 (b)

The currency of the Employer's country at the selling rates established for similar transactions by the Central Bank shall be on the date 28 days prior to the date of opening the bids.

Clause 35.1

The Performance Security shall be in the form given in Section 3, Item 3.7.

Clause 35.3

Apart from the stipulation of Clause 35.1 of these Instructions to Bidders, there shall be no other form of Performance Security submission.

Clause 36.1

The method of dispute resolution shall be arbitration and the arbitrator shall be a person to be agreed between the parties or failing agreement. The arbitrator shall be appointed by The Chairman Institute of Arbitrators of Kenya.

5.7 Schedule of the Major Items of Plant to Be Used On the Proposed Contract.

The Bidder must indicate the core plant and equipment considered by the company to be necessary for undertaking the project together with proof ownership. (* Mandatory minimum number of equipment required by the Employer for the execution of the project that the bidder must make available for the Contract).

Item No.	Equipment Details	*Minimum Number Required for the Contract Execution	Maximum Score	No of Equipment Owned by the Bidder	No. of equipment to be hired/ purchased by the Bidder	No. of equipment to be made available for the Contract by the Bidder
A	**Bituminous Plants**					
	Bitumen Pressure distributor	Optional				
	Asphalt concrete paver					
B	**Compactors**					
	Vibrating compaction plate 300 mm wide	Optional				
	Vibrating compaction plate 600 mm wide					
	Subtotal for B					
C	**Concrete Equipment**					
	Mobile concrete mixers	1	3			
	Concrete vibrators	1	3			
	Subtotal for C					
D	**Transport (Tippers, dumpers, water tankers)**					
	4X2 tippers payload 7 – 12 tonnes					
	6X4 tippers payload 16 – 20 tonnes	1	3			
	8X4 tippers payload 16 – 20 tonnes					
	Flat bed lorries					
	Subtotal for D – tippers & dumpers	Optional				
	Water tankers (18,000 – 20,000 litres capacity)					
	Subtotal for D					

Item No.	Equipment Details	*Minimum Number Required for the Contract Execution	Maximum Score	No of Equipment Owned by the Bidder	No. of equipment to be hired/ purchased by the Bidder	No. of equipment to be made available for the Contract by the Bidder
E	**Earth – Moving Equipment** Wheeled loaders Motor graders (93 - 205kW) Trench excavator	**1**	**4**			
F	**Subtotal for E**					
	Excavators Hydraulic crawler mounted (7 – 10 tonnes) – 0.25 – 0.4 m3 SAE bucket. Hydraulic crawler mounted (10 – 16 tonnes) – 0.40 – 0.60 m3 SAE bucket. Hydraulic wheel mounted (7 – 10 tonnes) – 0.25 – 0.4 m3 SAE bucket. Hydraulic wheel mounted (10 – 16 tonnes) – 0.40 – 0.6 m3 SAE bucket. Hydraulic wheel mounted backloader (7 – 10 tonnes) – 0.25 – 0.4 m3 SAE bucket.		(Any gets 2 marks)			
	Subtotal for F					
G	**Rollers** Self propelled single drum vibrating (various types) Pneumatic rubber tyre (1-2 tonnes/wheel) Sheep's foot roller	1	1			
	Subtotal for G					

(Bidders must provide proof of ownership or lease arrangements for all plants and equipment. Proof of ownership must be provided also for leases other than those from MCTE)

We hereby certify that **notwithstanding** the list of plant detailed above, we will provide sufficient, suitable and adequate plant in good working order for the successful completion of works as specified under the contract.

…… ……
(Signature of Bidder) (Date)

APPENDIX TO QUALIFICATION CRITERIA

TABLE 1: PRE- QUALIFICATION CHECKLIST FOR COMPLETENESS AND RESPONSIVENESS

S/No.	Completeness and Responsiveness Criteria	References	Requirement
1.	Form of Bid	Section 1 Clause 20.2	- Amount must be indicated - Properly fill and sign
2.	Appendix to Form of Bid	Clause 20.2 Section 2	- Form properly sign
3.	Bid Security	Section 3 Clause 16/17	- Unconditional bank guarantee - In the format provided with all conditions
4.	Confidential Business Questionnaire	Section 3; Item 3.9	- Properly fill and sign - Provide all required information
5.	Form of Power of Attorney	Section 3; Item 3.15 Clause 5.1(a)	- Properly fill and sign - Provide copies of National Identification card or Passport.
6.	Tax Compliance Certificate	Employer's notice	- Copy of certificate Certified by Commissioner of Oaths - Valid
7.	Registration with National Construction Authority	Employer's notice Item 5.1.4 of QC	- Category 1, 2 & 3 - Copy of certificate Certified by Commissioner of Oaths
8.	Certificate of Incorporation	Employer's notice Item 1.4 of QC	- Copy of certificate Certified by Commissioner of Oaths
9.	Priced Bill of Quantities	Section 9	- Fill all rates, prices and amounts
10.	Eligibility	Section 3; Item 3.9 Clause 4.1/4.2	- Copies of National ID or passport for all directors - Certified copy of Form CR12
11.	Conflict of interest	Section 3; item 3.9 Clause 4.2	- to state explicitly
12.	Debarment	Section 3; item 3.21 Item 1.3 of QC	- Properly fill and sign
13.	Pending Litigation	Item 2.2 of QC	- Provide Sworn affidavit
14.	Litigation History	Section 3; item 3.20	- Fill in information and sign
15.	Non-completed works beyond completion date	Section 3; Item 5.2.1 of QC	- Fill information on non-completed works
16.	Certificate of Tenderers Visit to Site	Clause 8.1/8.3 Section 3; Item3.14	- Attend pre-bid meeting/visit - Bidders to sign attendance register - Certificate must be signed by the Employer's representative
17.	Schedule of Major Items of Plant	Item 3.11 of QC Section 3;	- Properly fill and sign
18.	Schedule of Key Personnel	Item 3.16 of QC Section 3;	- Properly fill and sign

19.	Roadwork Completed Satisfactorily	Item 3.17 of QC Section 3;	- Properly fill and sign
20.	Schedule of Ongoing Projects	Item 3.18 of QC Section 3;	- Properly fill and sign
21.	Schedule of other Supplementary Information / Financial Standings	Item 3.19/3.20 of QC Section 3;	- Properly fill and sign
22.	Anti-Corruption Declaration / Commitment / Pledge Form	Item 3.21 Section 3;	- Properly fill and sign
23.	Copies of Bid Document	Clause 20.1	- Replica of the original - Provide 2No.
REMARKS		Clause 13.1/20.2	- Bid document to be complete, properly filled and signed.

Key: QC – Qualification Criteria

TABLE 2: POST- QUALIFICATION SCORE

ITEM		DESCRIPTION	POINT SCORE SCALE
1		**FINANCIAL CAPACITY**	**Max 25**
	a	Audited Statements	0-6
	b	Cash flow statement (forecasts)	0-5
	c	Financial position/Ratios	0-4
	d	Bank statement	0-5
	e	Turnover	0-5
2		**EXPERIENCE**	**Max 20**
		General Experience	0-5
		Specific experience in related works	0-15
3		**CURRENT COMMITMENTS**	**Max 5**
		On-going works	0-5
4		**KEY PERSONNEL**	**Max 23**
		Site Agent	0-6
		Deputy Site Agent / Site Engineer	0-6
		Surveyor	0-5
		Foremen - 4 No. (General, Earthworks, Concrete, Bituminous Works)	0-3
		Materials Technologist	0-3
5		**PLANT AND EQUIPMENT**	**Max 16**
		Equipment capabilities	0-16
6		**WORK METHODOLOGY**	**0 - 6; Max 6**
7		**COUNTRY BASED**	**0 or 5; Max 5**
		TOTAL	**MAX 100**

SECTION 6: CONDITIONS OF CONTRACT

SECTION 6A - CONDITIONS OF CONTRACT PART I: GENERAL CONDITIONS OF CONTRACT

The Conditions of Contract, Part I: General Conditions shall be those forming Part I of the "Conditions of Contract for Works of Civil Engineering Construction," fourth edition 1987, reprinted in 1992 with further amendments, prepared by the *Fédération Internationale des Ingénieurs-Conseils* (FIDIC). These Conditions are subject to the variations and additions set out in Part II hereof entitled "Conditions of Particular Application.".

Copies of the FIDIC Conditions of Contract can be obtained from:

FIDIC Secretariat
P.O. Box 86
1000 Lausanne 12
Switzerland
Facsimile: 41 21 653 5432
Telephone: 41 21 653 5003

SECTION 6B - CONDITIONS OF CONTRACT PART II: (CONDITIONS OF PARTICULAR APPLICATION)

The following Conditions of Particular Application shall supplement the General Conditions of Contract. Whenever there is a conflict, the provisions herein shall prevail over those in the General Conditions of Contract. The Particular Condition is preceded by the corresponding clause number of the General Conditions to which it relates.

TABLE OF CONTENTS

Clause and Description **Page**

DEFINITIONS AND INTERPRETATION **77**

1.1 DEFINITIONS **77**

1.6 GENDER SPECIFIC WORDS **77**

ENGINEER AND ENGINEER'S REPRESENTATIVE **77**

2.1 ENGINEER'S DUTIES AND AUTHORITY **77**

ASSIGNMENT AND SUBCONTRACTING ..... ERROR! BOOKMARK NOT DEFINED.

4.1 SUBCONTRACTING ..... ERROR! BOOKMARK NOT DEFINED.

CONTRACT DOCUMENTS **78**

5.1 LANGUAGE AND LAW **78**

5.2 PRIORITY OF CONTRACT DOCUMENTS **78**

6.6 METRIC UNITS **79**

6.7 INTENT OF DRAWINGS AND SPECIFICATIONS **79**

6.8 DESIGN, DRAWINGS AND SPECIFICATIONS PREPARED BY THE CONTRACTOR **79**

6.9 SUBMISSIONS OF DESIGNS AND DRAWINGS **79**

6.10 AS-BUILT DRAWINGS **79**

7.4 DRAWINGS FOR TEMPORARY WORKS **79**

7.5 SIZE OF DRAWINGS **80**

7.6 SUBMISSION TO THE ENGINEER **80**

GENERAL OBLIGATIONS **80**

8.1 CONTRACTORS GENERAL RESPONSIBILITIES **80**

8.3 GENERAL REQUIREMENTS **80**

10.1 PERFORMANCE SECURITY 81

10.2 PERIOD OF VALIDITY OF PERFORMANCE SECURITY 82

10.3 CLAIMS UNDER PERFORMANCE SECURITY ..... ERROR! BOOKMARK NOT DEFINED.

10.4 COST OF PERFORMANCE SECURITY 82

11.1 INSPECTION OF SITE 82

11.2 ACCESS TO DATA 82

14.1 PROGRAMME TO BE SUBMITTED 82

14.2 REVISED PROGRAMME 84

14.3 CASH FLOW ESTIMATE TO BE SUBMITTED 85

15.1 CONTRACTOR'S SUPERINTENDENCE 85

15.2 CONTRACTOR'S AGENT OR REPRESENTATIVE 85

16.2 ENGINEER AT LIBERTY TO OBJECT 85

16.3 LANGUAGE ABILITY OF SUPERINTENDING STAFF 85

16.4 EMPLOYMENT OF LOCAL PERSONNEL 85

17.1 SETTING OUT 85

17.2 NOTICE TO ENGINEER 86

19.1 SAFETY, SECURITY AND PROTECTION OF THE ENVIRONMENT 86

20.4 EMPLOYER'S RISKS 88

21.1 INSURANCE OF WORKS AND CONTRACTOR'S EQUIPMENT 88

21.2 SCOPE OF COVER 89

21.4 EXCLUSIONS 89

21.5 INSURANCE OF GOODS 89

23.1 THIRD PARTY INSURANCE (INCLUDING EMPLOYER'S PROPERTY) 89

23.2 MINIMUM AMOUNT OF INSURANCE 89

25.1 EVIDENCE OF TERMS OF INSURANCE 89

25.5 SOURCE OF INSURANCE 89

25.6 INSURANCE NOTICES 89

25.7 INSURANCE IN KENYA 89

25.8 NOTIFICATION TO INSURERS 90

26.2 COMPLIANCE WITH STATUTES, REGULATIONS 90

26.3 INSPECTION AND AUDIT BY THE FUNDING AGENCY 90

28.2 ROYALTIES 90

29.2 PASSAGE AND CONTROL OF TRAFFIC 90

29.3 REINSTATEMENT AND COMPENSATION FOR DAMAGE TO PERSONS OR PROPERTY 90

29.4 PROTECTION OF EXISTING WORKS AND SERVICES 91

29.5 PROTECTION OF SURVEY BEACONS 91

30.2 TRANSPORT OF CONTRACTOR'S EQUIPMENT OR TEMPORARY WORKS 91

30.5 COMPLYING WITH STATE LAWS AND REGULATIONS 92

30.6 EFFECTS OF OTHER CONCURRENT CONSTRUCTION PROJECTS 92

34.2 LABOUR REGULATIONS 92

34.3 ENGAGEMENT OF LOCAL LABOUR 92

34.4 RATES OF WAGES AND CONDITIONS OF LABOUR 92

34.5 REPATRIATION OF LABOUR 92

34.6 HOUSING FOR LABOUR 92

34.7 ACCIDENT PREVENTION OFFICER 93

34.8 HEALTH AND SAFETY 93

34.9 LIFE SAVING APPLIANCES AND FIRST AID EQUIPMENT 93

34.10 MEASURES AGAINST INSECT AND PEST NUISANCE 93

34.11 EPIDEMICS 93

34.12 BURIAL OF THE DEAD 93

34.13 SUPPLY OF FOODSTUFFS 93

34.14 SUPPLY OF WATER 94

34.15 ALCOHOLIC LIQUOR OR DRUGS 94

34.16 ARMS AND AMMUNITION 94

34.17 FESTIVALS AND RELIGIOUS CUSTOMS 94

34.18 DISORDERLY CONDUCT 94

34.19 RECORDS OF LABOUR 94

34.20 TRADE UNIONS 94

34.21 DEFAULT IN PAYMENT OF WAGES 94

34.22 BREACH AND REMOVAL FROM LIST 94

34.23 OBSERVANCE BY SUBCONTRACTORS 94

35.2 MAINTENANCE OF RECORDS 95

35.3 REPORTING OF ACCIDENTS 95

MATERIALS, PLANT AND WORKMANSHIP 95

36.1 QUALITY OF MATERIALS, EQUIPMENT, SUPPLIES, PLANT, AND WORKMANSHIP 95

COMMENCEMENT AND DELAYS 95

41.1 COMMENCEMENT OF WORKS 95

41.2 DEFINITION OF COMMENCEMENT 95

42.1 POSSESSION OF SITE AND ACCESS THERETO 95

42.4 POSSESSION OF SITE AND ACCESS THERETO 96

45.1 RESTRICTION ON WORKING HOURS 96

45.2 OVERTIME HOURS 96

47.2 REDUCTION OF LIQUIDATED DAMAGES 96

47.3 CURRENCY OF LIQUIDATED DAMAGES 96

DEFECTS LIABILITY 96

49.2 COMPLETION OF OUTSTANDING WORK AND REMEDYING DEFECTS 96

49.5 DEFECTS LIABILITY PERIOD REPLACEMENTS 97

ALTERATIONS, ADDITIONS AND OMISSIONS 97

52.1 VALUATION OF VARIATION 97

52.2 POWER OF ENGINEER TO FIX RATES 97

52.3 DAYWORK 97

PROCEDURE FOR CLAIMS 98

53.1 NOTICE OF CLAIMS 98

CONTRACTOR'S EQUIPMENT, TEMPORARY WORKS AND MATERIALS 98

54.1 CONTRACTOR'S EQUIPMENT, TEMPORARY WORKS AND MATERIALS 98

54.2 EMPLOYER NOT LIABLE FOR DAMAGE 98

54.5 CONDITIONS OF HIRE OF CONTRACTOR'S EQUIPMENT 98

54.9 CONTRACTOR'S RESPONSIBILITIES FOR LICENSES 98

54.10 EQUIPMENT AND PLANT 98

MEASUREMENT 99

55.1 QUANTITIES....99

55.2 BILL OF QUANTITIES WITH NO RATES 99

56.1 WORKS TO BE MEASURED....99

57.1 METHOD OF MEASUREMENT 99

PROVISIONAL SUMS....100

58.4 PRIME COST SUM....100

NOMINATED SUBCONTRACTORS 100

CERTIFICATES AND PAYMENTS 100

60.2 INTERIM PAYMENT CERTIFICATE 100

60.3 FINAL ACCOUNT AND FINAL PAYMENT CERTIFICATE....101

60.4 PAYMENT OF CERTIFICATES 101

60.5 RETENTION MONEY....101

60.6 CURRENCY OF PAYMENT 102

60.7 OVERDUE PAYMENTS....102

60.8 CORRECTING AND WITHHOLDING 102

60.9 COMPLETION BY SECTIONS....102

60.10 STATEMENT AT COMPLETION....102

60.11 FINAL STATEMENT 102

60.12 DISCHARGE....103

60.13 FINAL PAYMENT CERTIFICATE....103

60.14 CESSATION OF EMPLOYER'S LIABILITY....103

62.1 DEFECTS LIABILITY CERTIFICATE....103

REMEDIES....103

63.1 DEFAULT OF CONTRACTOR....103

63.2 VALUATION OF DATE OF EXPULSION 104

63. VALUATION OF DATE OF EXPULSION 104

63.4 ASSIGNMENT OF BENEFIT OF AGREEMENT....104

63.5 CORRUPT OR FRAUDULENT PRACTICES....104

SPECIAL RISKS....104

65.2 SPECIAL RISKS....104

65.4 PROJECTILE, MISSILE....104

65.9 SPECIAL RISKS....105

SETTLEMENT OF DISPUTES....105

67.1 ENGINEERS DECISION....105

67.2 AMICABLE SETTLEMENT....105

67.3 ARBITRATION....106

NOTICES....106

68.1 NOTICES TO CONTRACTOR....106

68.2 NOTICES TO EMPLOYER AND ENGINEER....106

DEFAULT OF EMPLOYER....106

69.1 DEFAULT OF EMPLOYER....106

69.3 PAYMENT ON TERMINATION....106

69.4 CONTRACTOR'S ENTITLEMENT TO SUSPEND WORK....106

69.6 SUSPENSION OF FUNDING AGENCY LOAN....107

70 CHANGES IN COST AND LEGISLATION....107

CURRENCY AND RATES OF EXCHANGE....108

72 CURRENCY PROPORTIONS....108

ADDITIONAL CLAUSES....108

74.1 ILLEGAL PAYMENTS....108

75.1 TERMINATION OF CONTRACT FOR EMPLOYER'S CONVENIENCE....108

76.1 RESTRICTION ON ELIGIBILITY....108

77.1 JOINT AND SEVERAL LIABILITY....108

78.1 DETAILS TO BE CONFIDENTIAL....108

78.2 DRAWINGS AND PHOTOGRAPHS OF THE WORKS....109

79.1 OFFICIAL VISITORS....109

80.1 SUBSTANTIAL COMPLETION OF THE WORKS 109

81.1 MONTHLY SITE MEETINGS 109

81.2 MINUTES OF SITE MEETINGS 109

82.1 LEGAL PROVISIONS 109

83.1 NOISE AND DISTURBANCE 110

83.2 POLLUTION 110

CONDITIONS OF CONTRACT PART II (CONDITIONS OF PARTICULAR APPLICATION)

NOTES:

The Conditions of Particular Application (Conditions of Contract, Part II) modify and compliment like-numbered clauses in the General Conditions of Contract (Conditions of Contract, Part I). Both parts shall be read together, with the Conditions of Particular Application prevailing in case of conflict or discrepancy. Clauses of the General Conditions of Contract not specifically modified and supplemented shall remain in effect.

DEFINITIONS AND INTERPRETATION

1.1 Definitions

(a) (i) The "Employer" shall be County Executive, Department of Roads, Transport & Public work, County Government of Bomet

(iv) The "Engineer" shall be Chief Officer, Department of Roads, Transport & Public work, County Government of Bomet or any other competent person appointed by the Employer, and notified to the Contractor, to act in replacement of the Engineer.

(b) (i) Insert in line 2 after "the Bill of Quantities", the following, "the rates entered by the Contractor (whether or not such rate be employed in computation of the Contract Price)".

(v) The word "Tender" and its derivatives are synonymous with the word 'Bid,' and its derivatives, and the words 'Tender Documents' with 'Bidding Documents'. The words "Appendix to Tender" and the words "Appendix to Bid" shall have the same meaning as the words 'Appendix to the Form of Bid'."

Add the following paragraph at the end of Subclause 1.1 (f) (vii):

The aforesaid includes lands waters, river beds and other places on, under, in through which the Works are to be carried out including all offices, workshops or places where materials are to be stored or used for the purposes of the Contract. It also includes quarries; borrow pits, stock pile areas and spoil areas"

Add Subclause 1.1 (g) (v):

Dates shall be construed in accordance with the Gregorian Calendar.

Add the following Subclause 1.6:

1.6 Gender Specific Words

Wherever in the Contract Documents the word 'man' or 'men' is used directly or as a suffix it means 'woman' or 'women' also. The Word 'he' includes 'she' also.

ENGINEER AND ENGINEER'S REPRESENTATIVE

2.1 Engineer's Duties and Authority

With reference to Sub-Clause 2.1(b): Add the following

The Engineer shall obtain specific approval of the Employer before taking any of the following actions specified in the General Conditions of Contract:

(a) Consenting to the sub-letting of any part of the Works under Clause 4.
(b) Certifying additional cost determined under Clause 12
(c) Determining an extension of time under Clause 44
(d) Issuing a variation under Clause 52
(e) Certifying payment if the Contract Price will be exceeded
(f) Authorising the use of provisional sums in excess of the monetary limit for variations
(g) Issuing any Taking-over Certificate
(h) Certifying additional payment/costs under Clause 65;
(i) Issuing a Defects Liability Certificate under Clause 62
(j) Fixing rates or prices under Clause 52.

Notwithstanding the provisions set out above, to obtain approval of the employer, if in the opinion of the Engineer, an emergency occurs affecting the safety of life or of the Works or of adjoining property, he may, without relieving the Contractor of any of his duties and responsibilities under the Contract, instruct the Contractor to execute all such work or to do all such things as may, in the opinion of the Engineer, be necessary to abate or reduce the risk. The Contractor shall forthwith comply, despite the absence of approval of the Employer, with any such instruction of the Engineer. The Engineer shall determine an addition to the Contract Price, in respect of such instruction, in accordance with Clause 52 and shall notify the Contractor accordingly, with a copy to the Employer."

CONTRACT DOCUMENTS

5.1 Language and Law

(a) The language governing this Contract shall be English.

The "Ruling Language" which shall be used to interpret this Contract shall be English. Communication between the Contractor and Engineer or Engineer's representative shall be in English.

(b) The laws applicable to this Contract shall be the laws of the Republic of Kenya. Except to the extent otherwise provided by the Contract, the Kenyan courts shall have exclusive jurisdiction to hear and to determine all actions and proceedings in connection with and arising out of the Contract and the Contractor shall submit to the jurisdiction of Kenyan courts for the purpose of any such actions and proceedings.

5.2 Priority of Contract Documents

Delete the documents listed as (1) to (6) and substitute with the following:

(1) The Contract Agreement (if completed)
(2) The Letter of Acceptance
(3) Minutes of Pre-Contract Award Discussion
(3) Bid and Appendix to Form of Bid
(4) The Conditions of Contract, Part II; Conditions of Particular Application
(5) The Conditions of Contract, Part I; General Conditions of Contract
(6) The Special Specifications
(7) The Standard Specifications for Road and Bridge Construction, Department of Transport and Communications, 1986
(8) Clarifications and Rectifications accepted by the Employer
(9) The Drawings
(10) The priced Bill of Quantities
(11) Schedules and other documents forming part of the Contract.

Add to Clause 6 the following Subclauses 6.6 to 6.10:

6.6 Metric Units

All units used in the Contract shall be metric and for measurement of angles the 360 degrees circles systems shall be used

6.7 Intent of Drawings and Specifications

The intent of Drawings and Specifications is to describe the details for the complete construction and maintenance of the Works which the Contractor undertakes to perform in accordance with the terms of the Contract.

Where the Drawings or Specifications describe portions of the Works in general terms, but not in complete detail, it is understood that only materials and workmanship of the first quality are to be used. First quality refers to the quality as approved by the Engineer.

Unless otherwise specified, the Contractor shall furnish all labour, material, tools, equipment and incidentals, and do all the work involved in executing the Contract in a satisfactory and workman-like manner.

6.8 Design, Drawings and Specifications Prepared by the Contractor

No payment will be made to the Contractor for undertaking any kind of design work, preparation of drawings and specification, other than that specifically required by the terms of the Contract. Payment for design work, preparation of drawings and specifications, specifically required by the terms of the Contract shall be deemed to be included in the Rates and Lump Sums entered in the Bill of Quantities.

6.9 Submissions of Designs and Drawings

All detailed working drawings/shop drawings, design calculations and fabrication drawings for Temporary Works (such as formwork, staging, centring, scaffolding, specialized constructional, handling and launching equipment and the like) as well as bar bending and cutting schedules for reinforcement, material lists for structural fabrication including detailed drawings for templates, end anchorage and temporary support details for pre-stressing cables shall be prepared by the Contractor at his own cost and forwarded in triplicate to the Engineer at least six weeks in advance of actual constructional requirements. The Engineer will check and return one copy of the same for the Contractor’s use with amendments, if any, noted in red ink. Such approval shall not relieve the Contractor of any of his responsibilities in connection with temporary works.

The Contractor will supply four copies of the approved drawings for the Engineer’s use. The cost of preparing all such items of work shall be deemed to have been included in the respective rates/prices quoted by the Contractor in the Bill of Quantities.

6.10 As-Built Drawings

On completion of the Works, the Contractor shall arrange to furnish to the Employer two (2) bound sets of all "As Built" drawings for every component of the Works at his own cost, all such copies being on Polyester film of quality to be approved by the Engineer or his Representative and digitized copy (2 No.) in a Compact Discs (CDs) of quality approved by the Engineer or his Representative. The Taking-over Certificate of the Works, as per the provisions of Clause 48.1 herein, shall not be issued by the Engineer in the event of the Contractor's failure to furnish the aforesaid "As Built" drawings for the entire works.”

Add to Clause 7 the following Sub-clauses 7.4 to 7.6:

7.4 Drawings for Temporary Works

Drawings for Temporary works to be carried out by the Contractor shall be submitted to the Engineer for approval.

Working drawings of concrete structures consisting of such details as may be reasonably required for the successful execution of the work and which are not included in the plans furnished by the Employer, shall be prepared by the Contractor. Three sets of working drawings shall be submitted to the Engineer for approval.

7.5 Size of Drawings

All drawings submitted by the Contractor shall for convenience in filing be as far as possible of a uniform size, and not more than 1010 mm x 680 mm. The drawings shall be numbered and dated, and shall include the title of the Contract at the bottom of the drawing followed by the title of the drawing. All drawings shall have the appropriate scales drawn on them and notes shall be in English. All amendments to such drawings shall be noted and dated on the drawing.

7.6 Submission to the Engineer

Whenever the Contractor is required to submit to the Engineer proposals, details, drawings, calculations information, literature, materials, test report and certificates, the Engineer will consider each submission and, if appropriate, will reply to the Contractor in accordance with the relevant provision of the Conditions of Contract. Unless a defined period of time is stated in the contract, each submission shall be made by dates to be agreed with the Engineer having regard to the approved programme and the need to give the Engineer adequate time to consider each submission.

The approval of the Engineer of any submission shall not relieve the Contractor of his responsibilities under the Contract.

GENERAL OBLIGATIONS

Add to Subclause 8.1 the following:

8.1 Contractors General Responsibilities

Add to Subclause 8.1 the following:

(a) Within 28 days after receipt of the Engineer's Order to Commence the Works, the Contractor shall establish an office at the Site duly equipped for the Contractor's representative and his superintending personnel.

The Contractor shall maintain this office throughout the Contract period. The said office shall be the legal domicile of the Contractor, and all correspondence sent to this office shall be deemed to have been sent to the Contractor's head office.

(b) A foreign Contractor or a Kenya-foreign joint venture, if not registered in Kenya under the applicable laws of Kenya, shall undertake registration upon receipt of the Letter of Acceptance and prior to signing of the Contract.

Add to Clause 8 the following Subclause 8.3:

8.3 General Requirements

(a) Materials delivered to the site by Contractor or materials made available or supplied by the Employer shall be used solely for the execution of the Works.

(b) The Contractor shall minimise the pollution of and disturbance of lands, roads and other places on and around the Site. No trees or other vegetation shall be removed except to the extent necessary for the works.

(c) The Contractor shall comply with the current Government regulations with regard to the transport, storage and use of explosives and radio-active materials and use of radio communication equipment.

(d) The Contractor shall take all reasonable precautions:

(i) In connection with any rivers, streams, waterways, drains, water courses, lakes and the like to prevent as a consequence of the works, silting, erosion of beds and banks and pollution of the water that may adversely affect the quality or appearance thereof or cause injury or death to human, animal or plant life.

(ii) In connection with underground water resources, including percolating water, to prevent any interference as a consequence of the work with the supply to or abstraction from such sources and to prevent pollution of water that may adversely affect the quality thereof.

(e) The Contractor shall provide, maintain and remove on completion of the Works, settling lagoons and other facilities to minimise pollution due to the Contractor's operations including but not limited to quarrying, aggregate washing, concrete mixing and grouting.

(f) The Contractor shall provide, maintain and remove on completion of the Works, fencing around the site installations including housing, camps, offices and laboratories, providing free access to the Employer, the engineer, other Contractors and any other persons entitled to such access and provide appropriate security measures on such access roads.

(g) All buildings erected by the Contractor upon the site and camp sites, and the layout of the buildings and the sites, shall comply with the Laws of the country and all local By-laws in so far as they are applicable.

(h) The Contractor shall be absolutely and solely responsible for the safety and security of Temporary Works including, but not limited to, all work yards, pilings, staging, dams, coffer dams, trenches, fencing or other works and for the Plant and Contractor's Equipment in connection therewith which may be erected or provided for the execution of the Contract Works.

This provision shall be applicable to all temporary Works, Plant and Contractor's Equipment whenever provided and erected by the Contractor or his Subcontractor(s) for the purpose of or in connection with the Contract Works.

(i) The contractor shall keep in close contact with the police, Labour officers and all other officials as appropriate regarding their requirements for the control of workmen, restricted area permits or other matters and shall provide all assistance and facilities which may be required by such officials in the execution of their duties.

10.1 Performance Security

Replace the text of Subclause 10.1 with the following:

The Contractor shall provide security for his proper performance of the Contract to the Employer within 28 days after the receipt of the Letter of Acceptance. The Performance Security shall be as stipulated in the Appendix to the Form of Bid. The Performance Security shall normally be in the currency or currencies requested for payment by the Contractor and in the same proportions as those requested for payment in the Contract. The Contractor shall notify the Engineer when providing the Performance Security to the Employer.

The Performance Security shall be a bank guarantee which shall be issued either:

(a) By a bank located in Kenya or a foreign bank through a correspondent established and reputable bank located in Kenya or;

Without limitation to the provisions of the preceding paragraph, whenever the Engineer determines an addition to the Contract Price as a result of a change in cost and/or legislation or as a result of a variation amounting to more than 25 percent of the portion of the Contract Price payable in a specific currency, the Contractor, at the Engineer's written request, shall promptly increase the value of the Performance Security in that currency by an equal percentage.

The performance security of a joint venture shall be in the name of the joint venture.

10.2 Period of Validity of Performance Security

The performance security shall be valid until a date 28 days from the date of issue of the Taking-Over Certificate for the last section in case of partial handover. The security shall be returned to the Contractor within 28 days of expiration.

10.3 Claims under Performance Security

Delete sub-clause 10.3

Add the following Subclause 10.4:

10.4 Cost of Performance Security

The cost of complying with the requirements of this clause shall be borne by the Contractor.

11.1 Inspection of Site

Add the words "and the Contractor shall be deemed to have based his tender on all the aforementioned" after the words "affect his tender".

Delete the last paragraph completely and replace with the following:

The Employer in no way guarantees completeness nor accuracy of the soil, materials, subsurface and hydrological information made available to the Contractor at the time of bidding or at any other time during the period of the Contract, and the Contractor shall be responsible for ascertaining for himself all information as aforesaid for the execution of Works and his bid shall be deemed to have been priced accordingly.

Add a new Subclause 11.2:

11.2 Access to Data

Data made available by the Employer in accordance with Subclause 11.1 shall be deemed to include data listed elsewhere in the Contract as open for inspection at the address stipulated in Appendix to the Form of Bid.

14.1 Programme to be submitted

Delete Sub clause 14.1 and replace with the following:

The time within which the Programme shall be submitted shall be twenty eight (28) days .This detailed Programme shall be based upon the programme submitted by the Contractor as part of his bid and shall, in no material manner, deviate from the said programme.

The Contractor shall allow in his Programme for the following 11 public holidays per calendar year in Kenya upon which the Contractor shall not be permitted to work:

- New Year's Day (1st January)
- Good Friday
- Easter Monday
- Labour Day (1st May)
- Madaraka Day (1st June)
- Idd-Ul-Fitr
- Mashujaa Day (20th October)
- Jamhuri Day (12th December)
- Christmas Day (25th December)
- Boxing Day (26th December)

The Contractor should also allow per calendar year for a further two (2) unspecified public holidays which may be announced by the Government of Kenya with no prior notification, and upon which he shall not be permitted to work.

The Programme shall be submitted in two copies in the form of a Critical Path Method Network (CPM Network) showing the order of procedure and description of the construction methods and arrangements by which he proposes to carry out the Works. In addition, the aforesaid critical path programme should be supplemented by:

(i) A Gantt/time-bar chart detailing each construction activity, showing for each construction activity; the periods of construction activity planned; the percentage completion anticipated per month; the total estimated quantity of work; the average monthly production planned, and

(ii) A detailed work method statement in respect of each construction activity. It should also be supplemented by a time-bar chart of the same programme. The programme shall be coordinated with climatic, groundwater and other conditions to provide for the completion of the works in the order and by the time specified. The Programme shall be revised at quarterly intervals and should include a chart of the principal quantities of the forecast for execution monthly.

The detailed work method statement of each particular construction activity shall list by category/type and quantity the labour, skilled labour, supervisors, plant, equipment and materials to be employed on the particular construction activity; together with: the estimated average daily production anticipated, the estimated equipment availability and utilisation factor anticipated and a detailed step description of the way in which resources are to be utilised to achieve the required rate of construction/production.

The Contractor's attention is particularly drawn to the need to familiarise himself with customs procedures in connection with importation and to allow sufficient time in its programme for these to be completed.

During the execution of Works, the Contractor shall submit to the Engineer detailed particulars of any proposed amendments to the arrangements and methods submitted in accordance to the foregoing.

If details of the Contractor's proposals for Temporary Works are required by the Engineer for his own information the Contractor shall submit such detail within fourteen days of being requested to do so.

The various operations pertaining to the Works shall be carried out in such a progressive sequence so as to achieve a continuous and consecutive output of fully completed road works inclusive of bridge works and culverts within the time limits specified in the Contract.

The Contractor shall, wherever required by the Engineer, also provided in writing for information a detailed description of the arrangements and methods which the Contractor proposes to adopt for the execution of any particular part of the Works as directed by the Engineer.

Progress reporting by the Contractor should be supported on a monthly basis with an up-to-date analysis of the progress including a statement on items which are or are about to become critical to the Progress of Works, along with proposals on how the Contractor intends to address the situation.

The consent by the Engineer on any programme shall have no contractual significance other than that the Engineer would be satisfied if the work is carried out according to such programme, and that the Contractor undertakes to carry out the work in accordance with the programme, nor shall it limit the right of the Engineer to instruct the Contractor to vary the programme should circumstances make this necessary. The above shall not be taken to limit the right of the Contractor to claim for damage or extension of time to which he may be fairly entitled to in terms of the General Conditions of the Contract for delay or disruption of his activities.

Notwithstanding the General Conditions of Contract Clause 14.1, the programme to be submitted for the execution of the Works shall, in addition to the programme of pure construction activities, include an alleviation programme for Site staff and labour in respect of Sexually Transmitted Disease (STD) including HIV/AIDS. The STD and HIV/AIDS alleviation programme shall indicate when, how and what cost the Contractor plans to satisfy the requirements of Subclause 19.1 herein and the related Technical Specifications. For each component, the programme shall detail the resources to be provided or utilized and any related sub-contracting proposed. The programme shall also include provision of a detailed cost estimate with supporting documentation.

14.2 Revised Programme

Add the following at the end of this subclause:

The Contractor shall, when instructed by the Engineer, amend, correct or modify the Programme of the Works so as to take into account any delays and/or advances and modifications designs or for other reasons considered necessary by the Engineer.

If, during the progress of the work, the quantities of work performed per month fall below those shown in the Programme, or if the sequence of operations is altered, or if the Programme is deviated from in any other way, the Contractor shall, within two weeks after being notified by the Engineer, submit a revised Programme necessary to ensure completion of the Works or any part thereof within the Time for Completion, or any extended time granted pursuant to Clause 43 and Clause 44 of the General Conditions of Contract or so as to take into account any delays or advances or for other reasons considered necessary by the Engineer without prejudice to the Employer's right under Clause 63 of the General Conditions of Contract.

Any proposal to increase the tempo of work must be accompanied by positive steps to increase production by providing more labour and plant on Site, or by using the available labour and plant in a more efficient manner.

Should the Employer request and the Contractor undertake to finish the whole or part of the Works ahead of the time originally required by the Contract, payment for accelerating the work shall only be made if agreed to beforehand in writing and according to the terms of such agreement.

If the Programme is to be revised by reason of the Contractor falling behind his Programme, he shall produce a revised Programme showing the modifications to the original Programme to

complete the Works within the time as defined in Clause 43 of the General Conditions of Contract.

The Employer shall have the right to withhold payment at any time if the Contractor fails to submit the contractual construction programmes in accordance with Subclause 14.1 above or revise construction programmes due to his negligence, failure or omission.

14.3 Cash Flow Estimate to be submitted

The time limit within which a detailed cash flow estimate is to be submitted shall be twenty eight (28) days.

In preparing the estimates, the Contractor shall make provision for Advance payment, repayment of advance, retention, payment for services provided by the Employer and timing implications of Clause 60 Certificates and Payments.
A schedule of Payments for both local and foreign currency expected to be made to the Contractor by the Employer, shall be provided.

The cash flow estimate submitted with the bid shall be revised each time the construction Programme is submitted, and revised, under Subclauses 14.1 and 14.2 above.

15.1 Contractor's Superintendence

Add the following at the end of the first paragraph of Subclause 15.1:

The Contractor shall, within seven (7) days of receipt of the Engineer's Order to Commence the Works, inform the Engineer in writing, the name of the Contractor's representative and the anticipated date of his arrival on Site.

15.2 Contractor's Agent or Representative

Add the following Subclause 15.2:

The Contractor's agent or representative on the Site shall be an Engineer registered by the Engineer's Registration Board of Kenya in accordance with the Laws of Kenya cap. 530 or have equivalent status approved by the Engineer and shall be able to read, write and speak English fluently.

16.2 Engineer at Liberty to Object

At the end of this clause add "by a competent substitute approved by the Engineer at the Contractor's own expense".
Add the following Subclauses 16.3 and 16.4:

16.3 Language Ability of Superintending Staff

A reasonable proportion of the Contractor's superintending staff shall have a working knowledge of the language specified in the Appendix to Form of Bid pursuant to Subclause 5.1(a), or the Contractor shall have available on site at all times a number of competent interpreters, as required by the Engineer, to ensure proper transmission of instructions and information.

16.4 Employment of Local Personnel

The Contractor is encouraged to the extent practicable and reasonable, to employ staff and labour with appropriate qualifications who are Kenyan citizens.

17.1 Setting Out

The following additional paragraph shall apply to the provisions of the Subclause 17.1:

(d) The checking of all the setting-out of the proposed works relative to existing ground features, to be undertaken prior to the commencement of fabrication of structural

steelworks for superstructures. This preparation is to include providing the facility for the Engineer to undertake a timely check on this setting-out and alerting the Engineer to any likely problems foreseen.

The contractor shall give to the Engineer not less than 48 hours of notice of his intention to set out or give layout for any part of the works so that timely assignment can be made for checking the same.

Add the following new Subclause 17.2:

17.2 Notice to Engineer

The Contractor shall give to the Engineer not less than 48 (Forty eight) hours notice of his intention to set out or give levels for any part of the works so that timely arrangement may be made for checking or issuing instructions. He shall indicate therein by which date the information, if any, is required by him."

19.1 Safety, Security and Protection of the Environment

Add Subclauses 19.1 (d), (e), (f), (g), (h), (i), (j), (k), (l) and (m) and the subsequent text as follows:

(d) Notwithstanding the Contractor's obligation under Subclauses 19.1 (a), (b) and (c) of the Conditions of Contract, the Contractor shall carry out, without limitation, the following measures with a view to reducing or eliminating adverse environmental effects by the site Works:

(i) All quarries, borrow pits, diversions and detours shall be filled and landscaped, as far as practical, to their original condition after extraction of construction material.

(ii) Soil erosion and sedimentation due to the surface runoff or water from culverts or other drainage structures should be avoided by putting in place proper erosion control measures.

(iii) Long traffic diversion roads shall be avoided so as to minimise the effect of dust on the surrounding environment. In any case, all diversions shall be kept damp to reduce dust.

(iv) Haulage routes shall be kept as short as possible and watered as necessary.

(v) Spillage of oil, fuel, and lubricants shall be avoided. If spilt, they shall be collected and disposed of in such a way that there do not adversely affect the natural environment.

(vi) Rock blasting near settlement areas shall be properly coordinated with the relevant officers of the Kenya government in an attempt to minimise levels of noise pollution and community interference.

(e) The formulation and enforcement of an adequate safety programme shall be the obligation of the Contractor with respect to all the works under this Contract, regardless of whether performed by the Contractor or his Subcontractors. The Contractor shall, within 14 days after commencement of the Works, meet the Engineer to present and discuss his plan for the establishment of such safety measures as may be necessary to provide against accidents, unsafe acts, and so forth.

Within 28 days after commencement of the Works, the Contractor shall submit a written safety, security and environmental protection programme to the Engineer covering the overall works and based on the laws and regulations of Kenya. In addition, he shall prepare special safety programmes for blasting and handling of explosives as may be stipulated in the Specifications.

(f) The Contractor shall take all due precautions to avoid soil and water contamination by spillage of oil, grease, fuel and paint in the equipment yard, workshop or the site of works. Lubricants should be recycled.

(g) The Contractor shall install pollution control device in his asphalt plant.

(h) The Contractor shall implement re-plantation and grading of steep slopes in quarries and borrow pits to prevent disfiguration of landscape.

(i) The Contractor shall implement compensatory afforestation plan to counteract destruction of vegetation when required to do so by the Engineer. The Contractor shall pay proper attention to the aspect of borrow pit drainage to prevent formation of stagnant pools of water and incidence of mosquito vectors. All borrow pits will be provided with efficient drains which shall be connected to the natural outfalls.

(j) Notwithstanding implementation of any other provision contained in the Conditions of Contract, the failure on the part of the Contractor or his staff in the cases listed bellow will be considered default on the part of the Contractor and will attract the terms of Subclause 63.1 for remedies.

- Poor sanitation and solid waste in the workers camp
- Possible transmission of communicable diseases, including HIV/AIDS, between local people and the Contractor's workers
- Poaching by the Contractor's workers
- Illegal invasion of indigenous people by the Contractor's labour.

(k) All lights provided by the Contractor shall be screened so as not to interfere with any signal light on the railways or with any traffic or signal lights of any local or other authority.

(l) The Contractor shall be deemed to be in possession of, and ensure that the Contractor's personnel are fully aware of, relevant safety regulations.

(m) The Contractor shall ensure that all equipment, tools and other items used in accomplishing the Works, whether purchased, rented or otherwise provided by the Contractor are in safe, sound and good condition for performing the intending function.

Notwithstanding the terms of Clause 19.1 of the General Conditions of Contract, the Contractor shall throughout the contract (including the Defects Liability Period):

(i) Conduct Information, Education and Consultation (IEC) campaign, at least every other month, addressed to all the Site staff and labour (including all Contractor's Employees, all Subcontractors and Consultant's employees, and all truck drivers and crew marketing deliveries to Site) and to the immediate local communities, concerning the dangers and impact of Sexually Transmitted Diseases (STD) in general and HIV/AIDS in particular;

(ii) Provide male or female condoms for all Site staff and labour as appropriate; and

(iii) Provide for STD and HIV/AIDS professional screening, diagnosis, counselling and full treatment (except that in the case of HIV/AIDS cases treatment shall be limited to referral to a dedicated national or regional HIV/AIDS programme)of all Site staff and labour.

Amend Subclause 20.4 to read as follows:

20.4 Employer's Risks

The Employer's risks are:

(a) Insofar as they directly affect the execution of the Works in Kenya where the Permanent Works are to be executed:

(i) War and hostilities (whether war be declared or not), invasion, act of foreign enemies

(ii) Rebellion, revolution, insurrection, or military or usurped power, or civil war

(iii) Ionising radiations, or contamination by radioactivity from any nuclear fuel, or from any nuclear waste from the combustion of nuclear fuel, radioactive toxic explosive or other hazardous properties of any explosive nuclear assembly or nuclear component thereof;

(iv) Pressure waves caused by aircraft or other aerial devices travelling at sonic or supersonic speeds

(v) Riot, commotion or disorder, unless solely restricted to the employees of the Contractor or of his Subcontractors and arising from the conduct of the Works.

(b) Loss or damage due to the use or occupation by the Employer of any section or part of the Permanent Works, except as may be provided for in the Contract

(c) Loss or damage to the extent that it is due to the design of the Works, other than any part of the design provided by the Contractor or for which the Contractor is responsible, and

(d) Any operation of the forces of nature (insofar as it occurs on the Site) which an experienced contractor:

(i) Could not have reasonably foreseen, or

(ii) Could reasonably have foreseen, but against which he could not reasonably have taken at least one of the following measures:

i. Prevent loss or damage to physical property from occurring by taking appropriate measures, or

ii. Insure against such loss or damage."

21.1 Insurance of Works and Contractor's Equipment

Delete the first sentence of this clause and replace with the following:

"Prior to commencement of the Works the Contractor shall, without limiting his or the Employer's obligations and responsibilities under Clause 20, insure to the satisfaction of the Employer."

Add the following words at the end of subparagraph (a) and immediately before the last word of subparagraph (b):

"it being understood the insurance shall provide for compensation to be payable in the types and proportions of the currencies required to rectify the loss or damage incurred."

In Subclause 21.1(b), delete the words "or as may be specified in Part II of these Conditions".

21.2 Scope of Cover

(a) Delete the words "from the start of Work at the Site" and substitute with the words "from the first working day after the commencement date"

Add the following Subclause 21.2 (c):

(c) It shall be the responsibility of the Contractor to notify the insurance company of any change in the nature and extent of the Works and to ensure the adequacy of the insurance coverage at all times during the period of the Contract.

Amend Subclause 21.4 to read as follows:

21.4 Exclusions

There shall be no obligation for the insurances in Subclause 21.1 to include loss or damage caused by the risks listed under Subclause 20.4 subparagraphs (a) (i) to (v) above.

Add the following Subclause 21.5:

21.5 Insurance of Goods

The Contractor shall insure or cause to be insured all imported goods financed out of the proceeds of the Contract against marine and other hazards incidental to the acquisition, transportation and delivery thereof to the place of use or installation and where appropriate against all usual risks pertaining to the construction of the Works.

23.1 Third Party Insurance (Including Employer's Property)

Add the following at the beginning of this Subclause:

Prior to commencement of the Works …

23.2 Minimum Amount of Insurance

Add the following at the end of this subclause:

… with no limits to the number of occurrences

25.1 Evidence of Terms of Insurance

Insert the words "as soon as practicable after the respective insurances have been taken out but in any case" before the words "prior to the start of Work at the Site"

Add the following Subclauses 25.5 to 25.8:

25.5 Source of Insurance

The Contractor shall be entitled to place all insurance relating to the Contract (including, but not limited to, the insurance referred to in Clauses 21, 23, and 24) with insurers from any eligible source country which has been determined to be acceptable to the Employer.

25.6 Insurance Notices

Each policy of insurance effected by the Contractor for the purpose of the Contract shall include a provision to the effect that the Insurer shall have a duty to give notice in writing to the Contractor and Employer of the date when a premium becomes payable not more than thirty (30) days after the giving of such notice.

25.7 Insurance in Kenya

The risks against which the Contractor is obliged to insure under the Contract shall be insured through established and reputable companies approved by the Employer and located in Kenya and any cover against risks which the Contractor may enjoy shall be insured in Kenya by an

approved Kenyan Insurance Company in respect of the Contractor's obligations under the Contract.

25.8 Notification to Insurers

It shall be the responsibility of the Contractor to notify the insurers under any of the insurances referred or event which by the terms of such insurances are required to be so notified and the Contractor shall indemnify and keep indemnified the Employer against all losses, claims, demands, proceedings, costs, charges and expenses whatsoever arising out of or in consequence of any default by the Contractor in complying with the requirements of this subclause whether as a result of avoidance of such insurance or otherwise.

Add the following Subclauses 26.2 and 26.3

26.2 Compliance with Statutes, Regulations

The Employer will repay or allow to the Contractor all such sums as the Engineer shall certify to have been properly payable and paid by the Contractor in respect of such fees, provided always that, without prejudice to Subclause 26.1, nothing contained in this sub clause shall be deemed to render the Employer liable to all claims which may be considered to fall within the provisions of Subclause 22.1.

26.3 Inspection and Audit by the Funding Agency

The Contractor shall permit the funding agency to inspect the Contractor's accounts and records relating to the performance of the Contract and to have them audited by auditors appointed by the agency, if so required by the agency.

28.2 Royalties

Add the following at the end of Subclause 28.2:

The Contractor shall also be liable for all payments or compensation, if any, that are levied in connection with the dumping of part or all of any such material."

Add the following Subclauses 29.2 to 29.5:

29.2 Passage and Control of Traffic

The Contractor's attention is drawn to Specifications covering the Passage and Control of Traffic and in particular to the requirement for the submission of a detailed Programme for Passage of Traffic as required following the award of the Contract.

In case any operation connected with traffic which necessitates diversion, obstruction or closure of any road, railway or any other right of way, the approval of the Engineer or the Engineer's Representative and the concerned authorities shall be obtained well in advance by the Contractor.

29.3 Reinstatement and Compensation for Damage to Persons or Property

The Contractor shall reinstate all properties whether public or private which are damaged in consequence of the construction and maintenance of the Works to a condition at least equal to that prevailing before his first entry on them.

If in the opinion of the Engineer the Contractor shall have failed to take reasonable and prompt action to discharge his obligations in the matter of reinstatement, the Engineer will inform the Contractor in writing of his opinion, in which circumstances, the Employer reserves the right to employ others to do the necessary work of reinstatement and to deduct the cost thereof from any money due or to become due to the Contractor.

The Contractor shall promptly refer to the Employer all claims, which may be considered to fall within the provisions of Clause 22.1.

29.4 Protection of Existing Works and Services

The Contractor shall acquaint himself with the position of all existing services, such as sewers, surface water drains, cables for electricity, data and telephone, telephone and lighting poles, water mains, and the like before commencing any excavation or other works likely to affect the existing services.

The Contractor will be held liable for all damage to roads, irrigation ditches, mains pipes, electric cables, lines or services of any kind caused by him or his subcontractors in the execution of the Works. The Contractor must make good any damage without delay and, if necessary, carry out any further work ordered by the Engineer or Engineer's Representative, all at the Contractor's cost. Where work is to be carried out in the vicinity of overhead power lines, the Contractor shall ensure that all persons working in such areas are aware of the relatively large distance that high voltage electricity can "short" to earth when crane, or other large masses of steel, are in the vicinity of power lines. The Contractor's attention is drawn to appropriate standards which gives safe clearances for the various voltages.

The Contractor shall be held responsible for damage to existing works or services, and shall indemnify the Employer against any claims in this respect (including consequential damages). The Contractor shall be responsible for the reinstatement of the services, so affected, to the satisfaction of the Engineer.

In all cases where such works or services are exposed, they shall be properly shored, hung up or otherwise protected. Special care must be exercised in filling and compaction of the grounds under mains and cable. The exposed water meters, stopcock boxes and similar items shall be left uncovered.

As soon as any such existing works or services or structures are encountered on, over, under, in or through the Site during the performance of the Contract, the Contractor shall make a record of the location and description of such service or structure and shall send the same forthwith to the Engineer.

Installations adjacent to the Works shall be kept securely in place until the work is completed and shall then be made as safe and permanent as before.

Notwithstanding the foregoing requirements, and without reducing the Contractor's responsibility, the Contractor shall inform the Engineer immediately if any existing works or services are located, exposed or damaged.

29.5 Protection of Survey Beacons

The Contractor shall not remove, damage, alter or destroy in any way plot beacons. Should the Contractor consider that any beacons will be interfered with by the Work he shall notify the Engineer who, if he considers it necessary, will make arrangements for the removal and replacement of the beacons.

30.2 Transport of Contractor's Equipment or Temporary Works

Add the following at the end of this subclause.

If it is found necessary for the Contractor to move one or more loads of heavy constructional plant and equipment, materials or pre-constructed units of work over roads, highways, bridges on which such oversized and overweight items are not normally allowed to be moved, the Contractor shall obtain prior permission from the concerned authorities. Payments for complying with the requirements, if any, for protection of or strengthening of the roads, highways or bridges shall be made by the Contractor and such expenses shall be deemed to be included in his Contract Price.

Add the following Subclauses 30.5 and 30.6.

30.5 Complying with State Laws and Regulations

Nothing contained above shall excuse the Contractor or any of his Subcontractor(s) from complying with state laws regulating traffic on highways and bridges.

30.6 Effects of other Concurrent Construction Projects

The Contractor shall be deemed to have fully familiarised himself with planned construction operations or any other concurrent construction projects in Kenya which may have any material effect on the Contractor's own operations. In particular, the Contractor shall be deemed to have allowed for the effects of other concurrent construction contract(s) on any necessary transportation operations in connection with the Contract(s).

LABOUR

Add the following Subclauses 34.2 to 34.23

34.2 Labour Regulations

The Contractor and his Subcontractors shall, at all times, during the Contract period abide fully by the governing local laws and regulations.

The Contractor shall be responsible for making all arrangements for and shall bear all costs relating to recruitment, obtaining of all necessary visas, permits or other official permission for movements of staff and labour.

34.3 Engagement of Local Labour

The Contractor is encouraged to the extent practicable and reasonable to employ staff and labour with the required qualifications and experience from sources within Kenya, particularly in the vicinity of the Site.

34.4 Rates of Wages and Conditions of Labour

The Contractor shall pay rates of wages and observe conditions of labour not less favourable than those established for the trade or industry where the work is carried out. In the absence of any rates of wages or conditions of labour so established, the Contractor shall pay rates of wages and observe conditions of labour which are not less favourable than the general level of wages and conditions observed by other employers whose general circumstances in the trade or industry in which the Contractor is engaged are similar.

34.5 Repatriation of Labour

The Contractor shall be responsible for the return to the place where they were recruited or to their domicile of all such persons as he recruited and employed for the purposes of or in connection with the Contract, and shall maintain such persons as are to be so returned in a suitable manner until they shall have left the site or, in the case of persons who are not nationals of and have been recruited outside the Republic of Kenya shall have left Kenya or the site, as appropriate.

34.6 Housing for Labour

Save insofar as the Contract otherwise provides, the Contractor shall provide and maintain such accommodation and amenities as he may consider necessary for all his staff and labour, employed for the purposes of or in connection with the Contract, including all fencing, water supply (both for drinking and other purposes), electricity supply, sanitation, cookhouses, fire prevention and fire-fighting equipment, cookers, refrigerators, furniture, and other requirements in connection with such accommodation or amenities. On completion of the Contract, unless otherwise agreed with the Employer, the temporary camps or housing provided by the Contractor

shall be removed and the site reinstated to its original condition, all to the approval of the Engineer.

34.7 Accident Prevention Officer

The Contractor shall have on his staff on Site an officer dealing only with questions regarding the safety and protection against accidents of all staff and labour. This officer shall be qualified for this work and shall have the authority to issue instructions and shall take protective measures to prevent accidents.

34.8 Health and Safety

Due precautions shall be taken by the Contractor, and at his own cost, to ensure the safety of his staff and labour and, in collaboration with and to the requirements of the local health authorities, to ensure that medical staff, first aid equipment and stores, sick bay and suitable ambulance services are available at the camps, housing, and on the Site at all times throughout the period of the Contract and that suitable arrangements are made for the prevention of epidemics and for all necessary welfare and hygiene requirements. Workers shall always be transported using vehicles that meet the current transport regulations.

34.9 Life Saving Appliances and First Aid Equipment

The Contractor shall provide and maintain upon the Works sufficient, proper and efficient life-saving appliances and first-aid equipment to the approval of the Engineer. The appliances and equipment shall be available for use at all times.

34.10 Measures against Insect and Pest Nuisance

The Contractor shall at all times take the necessary precautions to protect all staff and labour employed on the Site from insect nuisance, rats, and other pests and reduce the dangers to health and the general nuisance caused by the same. The Contractor shall provide his staff and labour with suitable prophylactics for the prevention of malaria, and shall take steps to prevent the formation of stagnant pools of water. He shall comply with all the regulations of the local health authorities in these respects and shall in particular arrange to spray thoroughly with approved insecticide all buildings erected on the Site. Such treatment shall be carried out at least once a year or as instructed by the Engineer. The Contractor shall warn his staff and labour of the dangers of bilharzias and wild animals.

34.11 Epidemics

In the event of any outbreak of illness of an epidemic nature, the Contractor shall comply with and carry out such regulations, orders, and requirements as may be made by the Government or the local medical or sanitary authorities for the purpose of dealing with and overcoming the same.

34.12 Burial of the Dead

The Contractor shall make any necessary arrangements for the transport, to any place as required for burial, of any of his expatriate employees or members of their families who may die in Kenya. The Contractor shall also be responsible, to the extent required by the local regulations, for making any arrangements with regard to burial of any of his local employees who may die while engaged upon the Works.

34.13 Supply of Foodstuffs

The Contractor shall arrange for the provision of a sufficient supply of suitable food at reasonable prices for all his staff, labour, and subcontractors for the purposes of or in connection with the Contract.

34.14 Supply of Water

The Contractor shall, so far as is reasonably practicable, having regard to local conditions, provide on the Site an adequate supply of drinking and other water for the use of the Engineer and his staff, the Contractor's staff and labour.

34.15 Alcoholic Liquor or Drugs

The Contractor shall not, otherwise than in accordance with the Statutes, Ordinances, and Government Regulations or Orders for the time being in force, import, sell, give, barter, or otherwise dispose of any alcoholic liquor or drugs, or permit or suffer any such importation, sale, gift, barter, or disposal by his subcontractors, agents, staff, or labour.

34.16 Arms and Ammunition

The Contractor shall not give, barter, or otherwise dispose of, to any person or persons, any arms or ammunition of any kind or permit or suffer the same as aforesaid.

34.17 Festivals and Religious Customs

The Contractor shall, in all dealings with his staff and labour, have due regard to all recognised festivals, days of rest, and religious and other customs.

34.18 Disorderly Conduct

The Contractor shall at all times take all reasonable precautions to prevent any unlawful, riotous, or disorderly conduct by or among his staff and labour and take all reasonable precautions for the preservation of peace and protection of persons and property in the neighbourhood of the Works against the same.

34.19 Records of Labour

The Contractor shall keep proper wages books, in the language stipulated in the Appendix to the Form Bid, pursuant to Sub-Clause 5.1 (a) showing the time worked and wages paid to all employees in and about the execution of the Works, together with such other records as are required by any Statute, Ordinance, Law, Regulation or Bye-Law in force in Kenya governing the employment of labour. He shall be bound, whenever required, to produce such wages books and other records for the inspection of any persons authorized by the Engineer.

34.20 Trade Unions

The Contractor shall recognize the freedom of his employees to be members of trade unions.

34.21 Default in payment of Wages

In the event of default in payment of wages of any workmen employed on the Contract, and if a claim thereafter is filed in the office of the Engineer and satisfactory proof thereof is furnished, the Employer shall be notified forthwith and may, failing payment of such claim by the Contractor, arrange the payment out of monies at any time payable under the Contract and the amount so paid shall be deemed payment to the Contractor under the Contract.

34.22 Breach and Removal from List

Should the Contractor or any subcontractor be found to be in breach of any of the provisions of Clause 34, the Employer may recommend to the Government for his removal from the list of approved Contractors.

34.23 Observance by Subcontractors

The Contractor shall be responsible for the observance by his subcontractor of the foregoing provisions.

Add the following Subclauses 35.2 and 35.3:

35.2 Maintenance of Records

The Contractor shall maintain such records and make such reports concerning safety, health and welfare of persons and damage to property as the Engineer may prescribe from time to time.

35.3 Reporting of Accidents

The Contractor shall report to the Engineer details of any accident as soon as possible after its occurrence. In the case of any fatality or serious accident, the Contractor shall, in addition, notify the Engineer immediately by the quickest available means. The Contractor shall also notify the relevant authority (ies) whenever such report is required by the law of Kenya.

MATERIALS, PLANT AND WORKMANSHIP

Rename Subclause 36.1 as below.

36.1 Quality of Materials, Equipment, Supplies, Plant, and Workmanship

Add the following paragraph at the end of this subclause.

The Contractor is encouraged, to the extent practicable and reasonable, to use materials, Contractor's Equipment, Plant, and supplies from sources within Kenya.

COMMENCEMENT AND DELAYS

41.1 Commencement of Works

Replace the words "as soon as reasonably possible" with the words "on Site within 28 days".

Add the following subclause:

41.2 Definition of Commencement

For the purposes of this subclause, the Works shall be deemed to have commenced when all of the following conditions are satisfied:

(a) The approved competent and authorized agent or representative of the Contractor is resident in the project area and is giving his whole time to the superintendence of the Works.

(b) The provision by the Contractor of evidence that all insurances required by the Contract are in force.

(c) The Contractor has an established an office in the project area with postal address for receipt of correspondence.

(d) The principal items of constructional plant have been brought to Site and put to work in the execution of the permanent Works.

42.1 Possession of Site and Access Thereto

At the end of Subclause 42.1, add the following:

The Contractor shall bear all costs and charges for such lands as the Contractor may reasonably require for camps, offices, workshops, diversion roads, borrow pits, and quarries and any additional facilities outside the site required by him for the purpose of works.

Add the following subclause:

42.4 Possession of Site and Access thereto

The Contractor shall not enter any part of the Site until he has requested and received permission to do so from the Employer or the Engineer.

The Contractor shall not use any portion of the Site for any purpose not connected with the Works.

45.1 Restriction on Working Hours

Delete Subclause 45.1 and substitute with the following:

If the Contractor requests for permission to work by day and night and if the Engineer shall grant such permission, the Contractor shall not be entitled to any additional payment for so doing.

All such work at night shall be carried out without unreasonable noise or other disturbance and the Contractor shall indemnify the Employer from and against any liability for damages on account of noise or other disturbance created while carrying out night work and from against all claims, demands, proceeding, costs, charges and expenses whatsoever in regard or in relation to such liability. In addition, the Contractor shall be required to provide, for any work carried out by night or recognised days of rest, adequate lighting and other facilities, so that the work is carried out safely and properly.

45.2 Overtime Hours

Working hours shall be observed by the Contractor as stipulated in the Labour Laws of Kenya. However when deemed necessary to expedite the Works, overtime, night time or holiday working may be allowed by the Engineer in accordance with the provisions of Subclause 46.1. The Contractor, in these cases, shall pay all costs of the Engineer and his staff for such overtime, night time or holiday working at site as stipulated under Subclause 46.1 of the General Conditions of Contract.

47.2 Reduction of Liquidated Damages

The following supplements this subclause.

There shall be no reduction in the amount of liquidated damages in the event that a part or a section of the Works within the Contract is certified as completed before the whole of the Works comprising that Contract.

No bonus for early completion of the Works shall be paid to the Contractor by the Employer.

The sum stated in the Appendix to Form of Bid as liquidated damages shall be increased by a sum equivalent to any amount payable by the Employer to the Contractor under clause 70.1 in respect of an increase in costs in such period that would not have been incurred by the Contractor if the Works had been completed by the due date for completion prescribed by Clause 43.
Add the following Subclause 47.3:

47.3 Currency of Liquidated Damages

Liquidated damages shall be paid by the Contractor to the Employer in the types and proportions of currencies as shall be payable to the Contractor under the Contract.

DEFECTS LIABILITY

49.2 Completion of Outstanding Work and Remedying Defects

Add at the end of this subclause the following sentence:

Any work ordered to be executed under this subclause shall be carried out at a time and in a manner as directed by the Engineer so as to interfere as little as possible with the operations of the Employer or of other contractors and no extension(s) of the defects liability period will be allowed for the execution of this work.

Add Subclause 49.5 as follows:

49.5 Defects Liability Period Replacements

The provisions of this clause shall apply to all replacements or renewals of Plant and equipment to be provided with respect to the utilities under the Contract, carried out by the Contractor to remedy defects and damages as if the replacements and renewals had been taken over on the date they were completed. The Defects Liability Period for the Works shall be extended by a period equal to the period during which the Works can not be used by reason of the defect or damage. If only part of the Works is affected the Defects Liability Period shall be extended only for that part.

ALTERATIONS, ADDITIONS AND OMISSIONS

52.1 Valuation of Variation

Add the following final sentences to this subclause:

The agreement, fixing or determination of any rates or prices as aforesaid shall include any foreign currency and the proportion thereof.

Where the Contract provides for the payment of the Contract Price in more than one currency, and varied work is valued at, or on the basis of, the rates and prices set out in the Contract, payment for such varied work shall be made in the proportions of various currencies specified in the Appendix to Form of Bid for payment of the Contract Price. Where the Contract provides for payment of the Contract Price in more than one currency, and new rates or prices are agreed, fixed, or determined as stated above, the amount or proportion payable in each of the applicable currencies shall be specified when the rates or prices are agreed, fixed, or determined, it being understood that in specifying these amounts or proportions the Contractor and the Engineer (or, failing agreement, the Engineer) shall take into account the actual or expected currencies of cost (and the proportions thereof) of the inputs of the varied work without regard to the proportions of various currencies specified in the Appendix to Form of Bid for payment of the Contract Price.

52.2 Power of Engineer to Fix rates

Add a final sentence to the first paragraph as follows:

Where the Contract provides for the payment of the Contract Price in more than one currency, the amount or proportion payable in each of the applicable currencies shall be specified when the rates or prices are agreed, fixed, or determined as stated above, it being understood that in specifying these amounts or proportions the Contractor and the Engineer (or, failing agreement, the Engineer) shall take into account the actual or expected currencies of cost (and the proportions thereof) of the inputs of the varied work without regard to the proportions of various currencies specified in the Appendix to Form of Bid for payment of the Contract Price.

52.3 Daywork

Add the following at the end of this subclause:

The Work so ordered shall immediately become part of the Works under the Contract. The Contractor shall, as soon as practicable after receiving the Daywork Order from the Engineer undertake the necessary steps for due execution of such Work. Prior to commencement of any work to be done on a Daywork basis, the Contractor shall give a notice to the Engineer stating the exact time of such commencement.

PROCEDURE FOR CLAIMS

53.1 Notice of Claims

Add the following at the end of this subclause:

The Contractor shall also state the references of the Contract Clauses and Subclauses on which he has based his claims.

CONTRACTOR'S EQUIPMENT, TEMPORARY WORKS AND MATERIALS

For the purpose of these subclauses, the term "Equipment" shall be read as "Contractor's Equipment" where the context so requires.

54.1 Contractor's Equipment, Temporary Works and Materials

Amend Subclause 54.1 as follows:

Line 5; add "written" between "the" and "consent".

Add a final sentence to this subclause as follows:

The Contractor shall every month give to the Engineer a statement showing the amount of plant and Contractor's equipment, which has been brought to the Site.

54.2 Employer not Liable for Damage

Delete this subclause entirely.

54.5 Conditions of Hire of Contractor's Equipment

Delete this subclause entirely.

Add Subclauses 54.9 and 54.10 as follows:

54.9 Contractor's Responsibilities for Licenses

The Contractor shall obtain his own information with regard to the granting of import and export licenses for materials, equipment and plant. The Contractor shall bear all expenses for Plant, Materials, Equipment and Maintenance required for the completion and maintenance of the works and shall be deemed to have satisfied himself with regard to all his liabilities under the laws and regulations governing the granting of these licenses. The Contractor shall ensure that requests for import and export licenses are submitted in sufficient time to clear all formalities before the said licenses are required.

54.10 Equipment and Plant

The Contractor shall identify each piece of his equipment, other than hand tools, by means of an identification number plainly stencilled or stamped on the equipment at a conspicuous location, and shall furnish to the Engineer a list giving the description of each piece of equipment and its identification number. In addition, the make, model number and empty gross weight of each unit of compaction equipment shall be plainly stamped or stencilled in a conspicuous place on the unit. The gross weight shall be either the manufacturer's rated weight or the scale weight. The make, model, serial number and manufacturer's rated capacity of each scale shall be clearly stamped on the load-receiving element and its indicator or indicators. All meters shall be similarly identified, rated and marked.

MEASUREMENT

55.1 Quantities

Add the following to this subclause:

The quality and quantity of the Work included in the Contract Price shall be deemed to be that which is set out in the Contract Bill of Quantities. The Bill of Quantities, unless otherwise expressly stated therein, shall be deemed to have been prepared in accordance with the principles of the latest edition of the Civil Engineering Standard Method of Measurement.

Any error in description or in quantity or any omission of items from the Contract Bill of Quantities or Specifications shall not vitiate this Contract but shall be corrected and deemed to be a variation required by the Engineer. Subject to the foregoing, any error whether arithmetical or not in the computation of the Contract Price shall be deemed to have been accepted by the parties hereto.

The Contract Price shall not be adjusted or altered in any way whatsoever otherwise than in accordance with the express provisions of these conditions.

Add the following new sub clause:

55.2 Bill of Quantities with no Rates

Any item of Work described in the Bill of Quantities for which no rate or price has been entered in the Contract shall be considered as included in other rates and prices in the Contract and will not be paid for separately by the Employer.

56.1 Works to be Measured

Delete Subclause 56.1 and replace with the following:

The Contractor shall prepare and submit to the Engineer all necessary field notes and other records taken and computations made for the purpose of quantity measurements, of which the forms shall be approved by the Engineer, for the monthly progress payment under Clause 60. The measurement of work quantities made by the Contractor shall be verified and certified by the Engineer based on the above mentioned documents.

The Contractor shall furnish all personnel, equipment and materials to make such surveys and computations as necessary to determine the quantities of work performed. Unless otherwise prescribed in the specifications or the drawings, all measurements for payment shall be made by the dimensions, lines and grades as shown on the drawings or by direct survey of which the methods shall be approved by the Engineer.

The documents submitted for measurement and payment shall become the property of the Employer and shall be used to the extent necessary to determine the monthly progress payment to be made to the Contractor under the Contract. Direct survey, if conducted, shall be subject to checking and verification by the Engineer and all errors in the said survey work and related computations as found during such checking shall be immediately corrected by the Contractor.

In case of any disagreement on an item of measurement, the Engineer’s opinion will prevail during the assessment of the statement for monthly interim payments. Should the Contractor consider himself entitled to any form of claim with respect to the disagreement in measurement, the procedure for such is detailed under Clause 53 of the Conditions of Contract.

57.1 Method of Measurement

Delete this subclause and substitute with the following:

The Works shall be measured net with deductions made in accordance with the principles of the latest edition of the Civil Engineering Standard Method of Measurement. All measurements shall be given in metric (SI) units.

PROVISIONAL SUMS

Add the following Subclause 58.4:

58.4 Prime Cost Sum

Wherever an item in the Bill of Quantities has been referred to as a "P.C. Sum" (Prime Cost Sum), that item shall be construed as a Provisional sum and the provisions of Subclauses 58.1 to 58.3 will apply.

NOMINATED SUBCONTRACTORS

CERTIFICATES AND PAYMENTS

60.2 Interim Payment Certificate

The Contractor shall submit to the Engineer, in the manner required by the Engineer after the end of each month a statement showing the estimated total value of permanent Work properly executed and materials or goods for permanent works brought to Site up to the end of the previous month (if the value shall justify the issue of an interim certificate) together with any adjustments under Clause 70 and any outstanding claims and sums the Contractor considers may be due to him. The Contractor shall amend or correct his estimate as directed by the Engineer and the latter shall not accept it until he is satisfied that it is fair and reasonable. With respect to the said materials and goods, no payment for them shall be made unless:

(i) The materials are in accordance with the specifications for the Works.

(ii) The materials have been delivered to Site and are properly stored and protected against loss, damage or deterioration.

(iii) The Contractor's record of the requirements, orders, receipts and use of materials are kept in a form approved by the Engineer, and such records are available for inspection by the Engineer.

(iv) The Contractor has submitted a statement of his cost of acquiring and delivering the materials and goods to the Site, together with such documents as may be required for the purpose of evidencing such cost.

(v) The materials are to be used within a reasonable time.

The Contractor will be paid on the certificate of the Engineer the amount due to him on account of the estimated total value of the permanent Work executed up to the end of the previous month together with such amount (not exceeding 75% of the value) as the Engineer may consider proper on account of materials and goods for permanent Work delivered by the Contractor on Site and in addition, such amount as the Engineer may consider fair and reasonable for any Temporary Works for which separate amounts are provided in the Bill of Quantities, all of which shall be subject to a retention of the percentage named in the Appendix to Form of Bid until the amount retained (hereinafter and in all Contract documents called the "Retention Money") shall reach the "Limit of Retention Money" named in the said Appendix to the Form of Bid. Provided always that no interim certificate shall be issued for a sum [such sum always being the net amount thereof after all deductions for retention etc) less than that named in the Appendix to Form of Bid as "Minimum Amount of Interim Certificate" at one time.

Within 14 days after receiving a statement from the Contractor as aforesaid, and subject to the Contractor having made such further amendments and corrections as the Engineer may require, the Engineer shall issue a Certificate of Payment to the Employer showing the amount due, with a copy to the Contractor.

The Engineer shall not unreasonably withhold certifying an Interim Payment Certificate and where there is a dispute regarding an item for payment, the Engineer may delete this disputed item from the Interim Payment Certificate and certify the remainder for payment provided the said payment is in accordance with the preceding paragraph. In cases of difference in opinion as to the value of any item, the Engineer's view shall prevail.

60.3 Final Account and Final Payment Certificate

As soon as possible after the issue of Taking - Over Certificate or the termination of the Contract and not later than the time of issue of Defects Liability Certificate, the Contractor shall prepare and submit to the Engineer (with a copy to the Employer), a Statement of Final Account showing in detail the total value of work done in accordance with the Contract together with all sums paid in previous payments. Within thirty (30) after receipt of such further information as may be reasonably required from the Contractor for its verification, the Engineer shall check the said statement, prepare and submit a Final Payment Certificate to the Employer (with a copy to the Contractor).

The Final Payment Certificate shall state:

(a) The (final) total value of all Work executed in accordance with the Contract

(b) After giving credit to the Employer for all amounts previously paid to the Contractor, the balance, if any, due from the Employer to the Contractor or the Contractor to the Employer, as the case may be.

Unless the Contractor notifies the Engineer of his objection to the Final Payment Certificate within twenty eight [28] days of delivery thereof, he shall be deemed to have agreed that he accepts the total Contract Price as set out in the Final Payment Certificate as full settlement for all work executed under the Contract including any claims, variations and omissions thereof.

However, a Final Certificate of Payment shall not be conclusive:

(i) To the extent that fraud or dishonesty relates to or affects any matter dealt with in the Certificate, or

(ii) If any arbitration or court proceedings under the Contract have been commenced by either party before the expiry of 90 days after the issue of the Final Certificate of Payment.

60.4 Payment of Certificates

Payment upon each of the Engineer's Certificates for Interim Payments shall be made by the Employer within the time stated in the Appendix to Form of Bid from the date of the Engineer's signature and issue of each Certificate of Payment to the Employer.

Payment upon the Engineer's Final Payment Certificate shall be made by the Employer within the time stated in the Appendix to Form of Bid from the date of issue of the Final Certificate of Payment signed by the Engineer and countersigned by the Contractor or his authorised agent or representative.

Payments to the Contractor by the Employer shall be made in the currencies in which the Contract Price is payable into a bank account or accounts nominated by the Contractor.

Making of a payment by the Employer shall be considered to have been duly executed on the day that the Employer has issued a cheque.

60.5 Retention Money

One half of the retention money shall become due upon the issue of a Taking – Over Certificate and shall be paid to the Contractor when the Engineer shall certify in writing that the last section

of the whole of the Works has been substantially completed and the other half shall be paid to the Contractor after the expiration of the Defects Liability Period and the issue of a Certificate under Clause 62. Provided always that if such time there shall remain to be executed by the Contractor any Works ordered during such period pursuant to Clauses 49 and 50 thereof, the Employer shall be entitled to withhold payment [until the completion of such Works] of so much of the second half of the Retention Money as shall in the opinion of the Engineer represent the Costs of the Works so remaining to be executed. Provided further that in the event of different Defects Liability Periods having become applicable to different parts of the Works pursuant to clause 48 hereof the expression "expiration of the Defect Liability Period" shall for the purpose of this subclause be deemed to mean the expiration of the latest of such periods.

60.6 Currency of Payment

The Contract price shall be stated in Kenya Shillings. All payments to the Contractor shall be made in Kenya shillings.

60.7 Overdue Payments

Unless otherwise stated in the Appendix to the Form of Bid interest shall be paid on the overdue amounts and the interest to be paid shall be based on the rates of the Central Bank of Kenya 28 days prior to the opening of the bids.

60.8 Correcting and Withholding

The Engineer may by any interim certificate or through the final account make any correction or modification to any previous certified sum and shall have authority, if any work or part thereof is not being carried out to his satisfaction, to omit or reduce the value of such work in any Interim Payment Certificate.

60.9 Completion by Sections

If a Taking-Over Certificate shall be issued for any section or part of the Works separately, the payments herein provided for on or after issue of such a Certificate shall be made in respect of such section or part and references to the Contract Price shall mean such part of the Contract Price as shall in the absence of agreement be apportioned thereto by the Engineer.

60.10 Statement at Completion

Not later than 14 days after the issue of the Taking-Over Certificate in respect of the whole of the works, the Contractor shall submit to the Engineer a statement at completion showing in detail and in a form approved by the Engineer:

(a) The final value of all work executed in accordance with the Contract up to the date stated in such Taking-Over Certificate.
(b) Any further sums which the Contractor considers to be due; and
(c) An estimate of amounts, which the Contractor considers, will become due to him under the Contract.

Estimated amounts at Completion shall be shown separately in the Statement. The Contractor shall amend and correct the Statement as directed by the Engineer who shall issue a Certificate at Completion to be processed in accordance with Subclause 60.4.

60.11 Final Statement

Not later than 56 days after the issue of the Defects Liability Certificate, the Contractor shall submit to the Engineer for consideration a draft final statement with supporting documents showing in detail and in the form approved by the Engineer:

(a) The final value of all work executed in accordance with the Contract, and
(b) Any further sums which the Contractor considers to be due to him.

If the Engineer disagrees with or cannot verify any part of the draft final statement, the Contractor shall submit such further information as the Engineer may reasonable require and shall make such changes in the draft as may be required.

60.12 Discharge

Upon submission of the Final Statement, the Contractor shall give to the Employer, with a copy to the Engineer, a written discharge confirming that the total of the Final Statement represents full and final settlement of all monies due to the Contractor arising out of or in respect of the Contract. Provided that such discharge shall become effective only after payment under the Final Payment Certificate issued pursuant to Subclause 60.14 has been made and the Performance Security referred to in Subclause 10.1 has been returned to the Contractor.

60.13 Final Payment Certificate

Upon acceptance of the Final Statement as given in Subclause 60.12, the Engineer shall prepare a Final Payment Certificate which shall be delivered to the Contractor's authorized agent or representative for his signature. The Final Payment Certificate shall state:

(a) The final value of all work executed in accordance with the Contract

(b) After giving credit to the Employer for all amounts previously paid by the Employer, the balance, if any, due from the Employer to the Contractor or the Contractor to the Employer as the case may be

Final Certificate shall be issued for any sum due to the Contractor even if such is less than the sum named in the Appendix to the Form of Bid.

60.14 Cessation of Employer's Liability

Unless the Contractor notifies the Engineer of his objection to the Final Certificate within 14 (fourteen) days of delivery thereof he shall be deemed to have agreed that he accepts the total Contract Price as set out in the Final Certificate as full settlement for all work executed under the Contract including any variations and omissions thereof.

62.1 Defects Liability Certificate

Delete the last sentence of this subclause beginning "Provided that the issue……in Sub-Clause 60.3".

REMEDIES

63.1 Default of Contractor

Delete the last paragraph of this subclause and substitute with the following:

then the Employer may, after giving 14 days' notice to the Contractor, enter upon the Site and expel the Contractor there from without thereby avoiding the Contract, or releasing the Contractor from any of his obligations or liabilities under the Contract, or affecting the rights and powers conferred on the Employer or the Engineer by the Contract, and may himself complete the Works or may himself complete the work or may employ any other contractor to complete the Works. The Employer or such other contractor may use for such completion so much of the Contractor's Equipment, Plant, Temporary Works and materials, which have been deemed to be reserved exclusively for the execution of the Works, under the provisions of the Contract, as he or they may think proper, and the Employer may, at any time, sell any of the said Contractor's Equipment, Temporary Works and unused Plant and materials and apply the proceeds of sale in or towards the satisfaction of any sums due or that may become due to him from the Contractor under the Contract."

63.2 Valuation of Date of Expulsion

Modify the heading of Subclause 63.2 by substituting "Valuation at Date of Termination" for "Valuation at Date of Expulsion." In Subclause 63.2, delete the word "termination" on the second and fifth lines and substitute "expulsion".

63. Valuation of Date of Expulsion

Modify the heading of Subclause 63.3 by substituting "Payment after Expulsion" for "Payment after Termination." In Subclause 63.3, delete the words "terminates the Contractor's employment" on the first line and substitute "shall enter and expel the Contractor".

63.4 Assignment of Benefit of Agreement

In Subclause 63.4, delete the word "termination" on the second line, and substitute "expulsion".

Add the following at the end of this subclause:

But on the terms that a supplier or subcontractor shall be entitled to make any reasonable objection to any further assignment thereof by the Employer and the Employer may pay the supplier or subcontractor for any such materials supplied or Works executed under such agreement, whether the same be assigned as aforesaid or not, before or after the said determination, the amount due by such arrangement in so far as it has not already been paid by the Contractor.

Add the following subclause 63.5:

63.5 Corrupt or Fraudulent Practices

If in the judgment of the Employer the Contractor has engaged in corrupt or fraudulent practices, in competing for or in executing the Contract, then the Employer may, after having given 14 days notice to the Contractor, terminate the Contractor's employment under the Contract and expel him from the Site, and the provisions of Clause 63 shall apply as if such expulsion had been made under Subclause 63.1.

For the purpose of this Subclause:

"corrupt practice" means the offering, giving, receiving or soliciting of any thing of value to influence the action of a public official in the procurement process or in contract execution.

"fraudulent practice" means a misrepresentation of facts in order to influence a procurement process or the execution of a contract to the detriment of the Borrower, and includes collusive practice among bidders (prior to or after bid submission) designed to establish bid prices at artificial non-competitive levels and to deprive the Employer of the benefits of free and open competition.

SPECIAL RISKS

Subclause 65.2 is amended to read as follows:

65.2 Special Risks

The Special Risks are the risks defined under paragraph (a), subparagraphs. (i) to (v) of Subclause 20.4 of the Conditions of Contract".

65.4 Projectile, Missile

Delete "whenever and wherever occurring" under line 2 and add "on or near the site" after "explosive of war" under line 3.

Add Subclause 65.9 as follows:

65.9 Special Risks

(a) In the event of the Employer unilaterally ordering the final cessation of performance of the Contract for reasons not specified elsewhere in the Conditions of Contract the Contract shall be considered to be frustrated and the Contractor shall be indemnified as provided for under Clause 65.1.

(b) In the event of the Employer ordering the adjournment of the Contract before or after commencement of the Works for reasons not specified elsewhere in the Conditions of Contract, the Contractor shall be entitled to indemnity for any injury which he may have suffered as a consequence of such adjournment.

The Engineer shall award the Contractor payment of such sum as in his opinion shall be reasonable giving regard to all material and relevant factors including the Contractor's on costs and overheads, and the nature of the instruction to adjourn the Contract.

SETTLEMENT OF DISPUTES

67.1 Engineers Decision

"If a dispute of any kind whatsoever arises between the Employer and the Contractor in any connection with, or arising out of, the Contract or the execution of the works, whether during the execution of the works or after their completion and whether before or after repudiation or other termination of the Contract including any dispute as to any opinion, instruction, determination, certificate or valuation of the Engineer, the matter in dispute shall, in the first place, be referred in writing to the Engineer, with a copy to the other party. Such reference shall state it is made pursuant to this clause. No later than 28 (twenty eight) day after the day on which he received such reference the Engineer shall give notice of his decision to the Employer and the Contractor. Such decision shall state it is made pursuant to this clause.

Unless the Contract has already been repudiated or terminated, the Contractor shall, in every case, continue to proceed with the works with all due diligence and the Contractor and the Employer shall give effect forthwith to every such decision of the Engineer unless and until the same shall be revised, as hereinafter provided, in an Amicable Settlement, Adjudicator's or Arbitrator's award.

If either the Employer or the Contractor be dissatisfied with the any decision of the Engineer, or if the Engineer fails to give notice of his decision on or before the 28th (twenty eighth) after the day on which he received the reference, then either the Employer or the Contractor may, on or before the 28th (twenty eighth) day after the day on which he received notice of such decision, or on or before the 28th (twenty eighth) day after the day on which the said period of 28 days expired, as the case may be, give notice to the other party, with a copy for information to the Engineer, of his intention to commence Adjudication, as hereinafter provided, as to the matter in dispute. Such notice shall establish the entitlement of the party giving the same to commence Adjudication, as hereinafter provided, as to such dispute; no adjudication in respect thereof may be commenced unless such notice is given.

If the Engineer has given notice of his decision as to a matter in dispute to the Employer and the Contractor and no notice of intention to commence adjudication as to such dispute has been given by either the Employer or the Contractor on or before the twenty eighth day after the day on which the parties received notice as to such decision from the Engineer, the said decision shall become final and binding upon the Employer and the Contractor. ".

67.2 Amicable Settlement

Where notice to of intention to commence adjudication as to a dispute has been given in accordance with sub clause 67.1, the parties shall attempt to settle such dispute amicably before the commencement of Adjudication; provided that, unless the parties otherwise agree, Adjudication may be commenced on or after the 14th (fourteenth) day after the day on which

notice of intention to commence adjudication of such dispute was given, even if an attempt at amicable settlement thereto has been made
Subclause 67.3 is deleted and substituted with the following subclause:

67.3 Arbitration

by an arbitrator to be agreed upon between the parties or failing agreement to be nominated on the application of either party by the appointee designated in the Appendix to Form of Bid for the purpose and any such referee shall be deemed to be a submission to arbitration within the meaning of the Arbitration Laws of the Republic of Kenya.

NOTICES

68.1 Notices to Contractor

Add the following at the end of this subclause:

Notwithstanding the foregoing, the Contractor shall either maintain an address close to the Works or appoint an agent residing close to the Works for the purpose of receiving notices to be given to the Contractor under the terms of the Contract. This obligation shall be terminated upon the issue of the Certificate of Completion.

68.2 Notices to Employer and Engineer

Delete the words "nominated for that purpose in Part II of these Conditions" in this subclause and substitute with "given in the Appendix to Form of Bid".

DEFAULT OF EMPLOYER

Under Subclause 69.1, 69.4 and 69.5, substitute "Subclause 60.4 for "Subclause 60.10".

69.1 Default of Employer

In Subclause 69.1 (a), delete the words "28 days" in the second sentence and substitute with the words "60 days".

Delete Subclause 69.1 (d).

69.3 Payment on Termination

Delete from ", but in addition to the payments specified..." to the end of the Subclause.

69.4 Contractor's Entitlement to Suspend Work

Delete the words '28 days' and substitute with '60 days".

Delete sub-clause 69.4 (b) and substitute with the following:

the amount of such cost, which shall be added to the Contract Price. However, the costs due to idle time for plant, equipment and labour shall not be included in the said costs and shall be borne by the Contractor.

Add to Subclause 69.4 as follows:

Without prejudice to the Contractor's entitlement to interest under Subclause 60.7 (of these Conditions of Particular application) and to terminate under Subclause 69.1, the Contractor may suspend work or reduce the rate of work within 56 days after notification by the Foreign Funding Agency to the Kenya Government that the Financier has suspended disbursements from its loan, which finances in whole or in part the execution of the Works.

Add Subclause 69.6 as follows:

69.6 Suspension of Funding Agency Loan

In the event that the Foreign Funding Agency suspends the loan or credit to the Employer from which part of the payments to the Contractor are being made:

(a) The Employer shall notify the Contractor, with a copy to the Engineer, of such suspension within 7 days of having received the suspension notice from the Funding Agency, provided that:

(i) The Employer shall state in such notification whether sufficient funds in the appropriate currencies are expected to be available to the Employer to continue making payments to the Contractor beyond a date 60 days after the date of the Funding Agency's notification of the suspension, and

(ii) If such funds are not expected to be available, the Employer shall immediately inform the Engineer to instruct the Contractor to suspend progress of the Works pursuant to Subclause 40.1 of the General Conditions of Contract.

(b) If the Contractor has not received sums due to him upon the expiration of the 14 days from the time when the Foreign Funding Agency's loan or credit, from which part of the payments to the contractor is being made under Interim Certificates, is suspended, the Contractor may, without prejudice to the Contractor's entitlement to interest under Subclause 60.7, immediately take one or both of the following actions:

(i) Suspend work or reduce the rate of work, and/or

(ii) Terminate his employment under the Contract by giving notice to the Engineer. Such termination shall take effect 14 days after giving of the notice.

70 CHANGES IN COST AND LEGISLATION

Delete Clause 70 in its entirety, and substitute by 70.1 – 70.8 (inclusive):

70.1Price Adjustment

"The amounts payable to the Contractor, in various currencies pursuant to Sub-Clause 60.1, shall be adjusted in respect of the rise or fall in the cost of labour, Contractor's Equipment, Plant, materials, and other inputs to the Works, by comparing the Basic Rates at tendering stage and the current prevailing market prices.

70.2 Other Changes in Cost

To the extent that full compensation for any rise or fall in costs to the Contractor is not covered by the provisions of this or other Clauses in the Contract, the unit rates and prices included in the Contract shall be deemed to include amounts to cover the contingency of such other rise or fall of costs.

70.8 Subsequent Legislation

If, after the date 28 days prior to the latest date for submission of bids for the Contract, there occur in the country in which the Works are being or are to be executed changes to any National or State Statute, Ordinance, Decree, or other Law or any regulation or by-law of any local or other duly constituted authority, or the introduction of any such State Statute, Ordinance, Decree, Law, regulation or by-law which causes additional or reduced cost to the Contractor, other than under the preceding sub-clauses of this clause, in the execution of the Contract, such additional or reduced cost shall, after due consultation with the Employer and the Contractor, be determined by the Engineer and shall be added to or deducted from the Contract Price and the Engineer shall notify the Contractor accordingly, with a copy to the Employer. Notwithstanding the foregoing, such additional or reduced cost shall not be separately paid or credited if the same shall already have been taken into account in any inputs to the Price Adjustment in accordance with the provisions of Sub-Clauses 70.1.

CURRENCY AND RATES OF EXCHANGE

72 Currency Proportions

Delete clause 72 in its entirety and substitute the following:
"The currency of BID and payment is Kenya Shillings and rates of exchange requirements are not applicable."

73.4 Duties on Contractor's Equipment

Notwithstanding the provisions of Subclause 73.2, the Contractor's Equipment, including essential spare parts therefore, imported by the Contractor for the sole purpose of executing the Contract shall not be exempt from the payment of import duties and any other taxes upon initial importation.

ADDITIONAL CLAUSES

74.1 Illegal Payments

If the Contractor, or any of his Sub-Contractors, agents or servants gives or offers to give to any person any payment, gift, gratuity or commission as an inducement or reward for doing or forbearing to do any action in relation to the Contract or any other contract with the Employer, or for showing or forbearing to show favour or disfavour to any person in relation to the Contract or to any other contract with the Employer, then the Employer may enter upon the Site and the Works and expel the Contractor and the provisions of Clause 63 hereof shall apply as if such entry and expulsion had been made pursuant to that Clause.

75.1 Termination of Contract for Employer's Convenience

The Employer shall be entitled to terminate this Contract at any time for the Employer's convenience after giving 56 days prior notice to the Contractor, with a copy to the Engineer. In the event of such termination, the Contractor:

(a) Shall proceed as provided in Subclause 65.7, and

(b) Shall be paid by the Employer as provided in Subclause 65.8.

76.1 Restriction on Eligibility

(a) Any Plant, materials, or services which will be incorporated in or required for the Works, as well as the Contractor's Equipment and other supplies, shall have their origin in any of the countries and territories eligible under the Foreign Financier's Rules for Procurement.

(b) For the purposes of this clause, 'origin' means the place where the materials and equipment were mined, grown, produced, or manufactured or from which the services are provided.
(c) The origin of goods and services is distinct from the nationality of the supplier.

77.1 Joint and Several Liability

If the Contractor is a joint venture of two or more persons, all such persons shall be joint and severally bound to the Employer for the fulfilment of the terms of the Contract and shall designate one of such persons to act as a leader with authority to bind the joint venture. The composition or the constitution of the joint venture shall not be altered without the prior consent of the Employer.

78.1 Details to be Confidential

The Contractor shall treat the details of the Contract as private and confidential, save insofar as may be necessary for the purposes thereof, and shall not publish or disclose the same or any particulars thereof in any trade or technical paper or elsewhere without the previous consent in writing of the Employer or the Engineer. If any dispute arises as to the necessity of any

publication or disclosure for the purpose of the Contract the same shall be referred to the Employer whose determination shall be final.

78.2 Drawings and Photographs of the Works

The Contractor shall not disclose details of drawings furnished to him and works on which he is engaged without the prior approval of the Engineer in writing. No photograph of the work or any part thereof or equipment employed thereon shall be taken or permitted by the Contractor to be taken by any of his employees or any employees of his Subcontractors without the prior approval of the Engineer in writing and no such photographs shall be published or otherwise circulated without the approval of the Engineer in writing.

79.1 Official Visitors

The Contractor shall at all times when authorized by the Engineer give free and undisputed access of all facilities to any authorized employee of the Kenya Government or other authorized person wishing to view or inspect any part of the Site or Works or the materials therein.

80.1 Substantial Completion of the Works

The Contractor shall note that the Engineer reserves the right to certify the Works to be "substantially completed" in accordance with the provisions of Clause 48 of the General Conditions of Contract, unless the following portions of the Works are completed according to the Specifications:

(a) Works up to and including the bituminous wearing courses,
(b) All drains and drainage structures including bridges,
(c) Construction of the shoulders,
(d) Finishing of medians and slopes of cuts and fills and
(e) Reinstatement and environmental treatment of quarries and borrow pits.

81.1 Monthly Site Meetings

The Contractor or his authorised representative shall attend monthly meetings on the site with representatives of the Employer and the Engineer at dates and times to be determined by the Engineer. Such meetings will be held for evaluating the progress of the Contract and for discussion of matters pertaining to the Contract which any of the parties represented may wish to raise. Such meetings are not intended for discussing matters concerning the normal day-to-day running of the Contract.
The Contractor shall prepare and submit to the Resident Engineer one week before the meeting a monthly report in the format approved by the Engineer giving all the information and details regarding its accomplishment against the prevailing approved programme.

81.2 Minutes of Site Meetings

Agreements recorded in the Minutes of the Site Meetings are binding to all parties, if objections to the minutes have not been given in due time.

The Minutes of the Site Meetings shall be issued within 7 days and shall be numbered consecutively. Minutes shall be deemed to have been received by the Contractor unless the Contractor gives notice at the following meeting that the Minutes were not received.

Any objections to the Minutes of the Site Meetings shall at the latest be raised at the succeeding Site Meeting or presented to the Engineer in writing not later than 2 weeks after the meeting. If the Contractor at this time has not received the Minutes of the Site Meeting, the objection must be given in writing to the Engineer not later than 2 working days after the subsequent receipt of the said Minutes.

82.1 Legal Provisions

The Contractor shall keep himself fully conversant with the latest enactment's, provisions and regulations of all legislative and statutory bodies, and, in all respects and at all times, shall comply with such enactment's, provisions and regulations in regard to executing the Contract.

83.1 Noise and Disturbance

All works shall be carried out without unreasonable noise and disturbance. The Contractor shall indemnify and keep indemnified the Employer from and against any liability for damages on account of noise or other disturbances created while or in carrying out the work and from and against all claims, demands, proceedings, damages, costs, charges and expenses whatsoever in regard to or in relation to such liability.

83.2 Pollution

Subject, and without prejudice, to any other provision of the Contract and the law of the land and its obligations as applicable, the Contractor shall take all reasonable precautions in connection with:

(a) The rivers, streams, waterways, drains, water-course, lakes, reservoirs and the like to prevent:

(i) Silting
(ii) Erosion of their beds and banks, and
(iii) Pollution of the water so as to affect adversely the quality or appearance thereof or cause injury or death to animal and plant life.

(b) The underground water resources including percolating water to prevent:

(i) Any interference with the supply to or obstruction from such sources, and
(ii) Pollution of the water which may adversely affect the quality thereof.

The Contractor shall further comply with any and all laws, rules and regulations of governmental agencies having jurisdiction which now exist or which may be promulgated during the course of the works contracted for herein, relating to the control, regulation and prevention of pollution. Not by way of limitation of the foregoing, but in furthermore thereof, the Contractor shall use the highest prevailing and approved standards of care and diligence to prevent and to take care of all waste, oil, water and other waste materials that may accumulate and be caused by the Contractor's operations and performance of this Contract so as to prevent pollution of any nature or kind resulting from the Works performed under this Contract.

SECTION 7: STANDARD SPECIFICATIONS

SECTION 7: STANDARD SPECIFICATIONS

Standard Specifications refers to the Standard Specifications for Road and Bridge Construction, 1986 Edition

SECTION 8: SPECIAL SPECIFICATIONS

SECTION 8: SPECIAL SPECIFICATIONS

TABLE OF CONTENTS

Clause and Description **Page**

100 GENERAL 116

101 LOCATION AND EXTENT OF SITE 116
102 EXTENT OF CONTRACT 116
103 DRAWINGS 117
104 PROGRAMME FOR EXECUTION OF THE WORKS 117
105 ORDER OF EXECUTION OF THE WORKS 117
107 CERTIFICATE OF COMPLETION 117
108 METHOD OF CONSTRUCTION 117
109 NOTICE OF OPERATIONS 118
109.2 NOTIFICATION TERMS 118
117 HEALTH, SAFETY AND ACCIDENTS 118
119 USE OF EXPLOSIVES 118
120 PROTECTIONS OF EXISTING WORKS AND SERVICES 118
121 DIVERSION OF SERVICES 119
123 LIAISON WITH GOVERNMENT OFFICIALS AND POLICE 119
124 PROVISION OF LAND 119
125 WATER SUPPLY 120
127 INFORMATION FROM EXPLORATORY BORING AND TEST PITS 120
131 SIGNBOARDS 120
137 ATTENDANCE UPON THE ENGINEER AND HIS STAFF 120
137.1 STAFF EMPLOYED AND PAID BY THE CONTRACTOR FOR ATTENDANCE UPON THE ENGINEER 120
139 MISCELLANEOUS ACCOUNTS 120
140 PAYMENT OF OVERTIME FOR ENGINEER'S JUNIOR STAFF 121
142 LIQUIDATED DAMAGES 121
143 PROTECTION OF THE ENVIRONMENT 122
144 OFF ROAD ENVIRONMENTAL MEASURES 123
145 STAFF TRAINING 123

300 SETTING OUT AND TOLERANCES 123

301 SETTING OUT 123

600 QUARRIES, BORROW PITS, STOCKPILE AND SPOIL AREAS 124

601 GENERAL 124

800 CULVERT AND DRAINAGE WORKS 124

804 EXCAVATION FOR CULVERTS AND DRAINAGE WORKS 124
805 EXCAVATION IN HARD MATERIAL 124
809 BEDDING AND LAYING OF PIPE CULVERTS 125
810 JOINTING CONCRETE PIPES 125
812 BACKFILL 125
816 MINOR DRAINAGE STRUCTURES 125
817 MITRE DRAINS, CUT-OFF DRAINS, CATCH WATER/DRAINS, OUTFALL DRAINS AND EARTH DAMS. 125
817.2 CLEANING EXISTING DRAINS 125
817.3 CLEANING OF HYDRAULIC STRUCTURES 126
817.4 REMOVAL OF EXISTING PIPES, INLET AND OUTLET STRUCTURES 126
817.5 EXTENSION OF EXISTING PIPES 126
817.6 CHUTE DRAIN FOR HIGH EMBANKMENT SECTIONS 126

900 PASSAGE OF TRAFFIC 127

903 MAINTENANCE OF EXISTING ROAD 127

903.1 MAINTENANCE OF RIGHT OF WAY 127
904 CONSTRUCTION OF DEVIATIONS 128
906 PASSAGE OF TRAFFIC THROUGH THE WORKS 128
912 MEASUREMENT AND PAYMENT 128

1000 GRADING & GRAVELLING 129

1001 GENERAL 129
1002 MATERIALS 129
1003 MATERIALS REQUIREMENTS 129

100 GENERAL

Special Specification is supplementary to the Standard Specification and the two must be read in conjunction. In any case where there appears to be conflict between the two then the Special Specifications will take precedence.

In the absence of any definite provisions on any particular issue in the aforesaid Specifications, reference may be made to the latest codes and specifications of Design Manual for Roads and Bridges of the Department of Transport and communication of the Republic of Kenya, Kenya Bureau of Standards (KeBS), BS, ASTM, AASHTO and in that order. Where even these are silent, the construction and completion of the works shall conform to sound engineering practice as approved by the Engineer and in case of any dispute arising out of the interpretation of the above, the decision of the Engineer shall be final and binding on the Contractor.

Where reference is made in the Contract to specific standards codes to be met by the materials, plant, and other supplies to be furnished, and work performed or tested, the provisions of the latest current edition or revision of the relevant standards as on the date of the bid and codes/design manual in effect shall apply, unless otherwise expressly stated in the contract. Where such standards and codes/design manual are national, or relate to a particular country or region, other internationally recognised standards which ensure a substantially equal or higher performance than the standards and codes/design manual specified will be accepted subject to the Engineer's prior review and written approval. The difference between the standards specified and the proposed alternative standards must be fully described in writing by the Contractor and submitted to the Engineer at least 28 days prior to the date when the Contractor desires the Engineer's approval. In the event that the Engineer determines that such proposed deviations do not ensure substantially equal performance, the Contractor shall comply with the standards specified in the documents.

101 Location and Extent of Site

The road is located in Bomet County.

The site of the works shall be within the road reserve and any other places as may be designated in the Construction Contract.

102 Extent of Contract

The major works to be executed under the Contract comprise mainly of but are not limited to the following:

- Site clearance
- Carriageway grading and gravelling works
- Culvert and Drainage works

Maintenance of works during Contract Period – Defect Liability Period shall be 1 month.

Any other activity not listed above in either category but deemed to be necessary by the Engineer, shall be subject to the Engineer's formal instructions within the mode of payment stipulated either by day works or on a measured basis.

103 Drawings

This clause shall be read as under:

The drawings provided for bidding purpose shall be as contained in the Bid documents. The Engineer may from time to time, in order to enable satisfactory completion of works, revise, amend, or supersede any of these drawings. It shall be the Contractor's responsibility to construct the works in conformity with the latest revision and amendment to the drawings provided that the Engineer has given the Contractor in writing such reasonable prior notices of intention to revise, amend, or supersede as the nature of the intended change required and relevant drawings have been issued to the Contractor.

104 Programme for Execution of the Works

The Contractor shall provide the works programme, required under Clause 14.1 of the Conditions of Contract, within 28 days of receipt of the Engineer's Order to commence work.

The programme shall be coordinated with climatic and other conditions to provide for the completion of the works in the order and by the time specified.

The Contractor shall carry out the Works of the Contract in accordance with the programme agreed with the Engineer, but he shall in no manner be relieved by the Engineer's approval of the programme, of his obligation to complete the works in the prescribed order and by the prescribed completion date and he shall from time to time review his progress and make such amendments to his rate of execution of the works as may be necessary to fulfil his obligations.

The Contractor shall allow in his programme for construction of trial sections and carrying out tests upon them as directed by the Engineer in accordance with the provisions of Clause 129 of the Standard Specification. The time for completion of the Contract shall not be extended because of the time taken to carry out tests and evaluate trial sections.

105 Order of Execution of the Works

In addition to Clause 105 of the Standard Specification, the Contractor shall carry out the Works such that a continuous and consecutive output of fully completed work is achieved.
Generally, the Contractor shall commence the works at the beginning of the road package and progress continuously towards the other end without leaving any isolated section or sections of road uncompleted.

107 Certificate of Completion

Wherever the "Certificate of completion" and "Period of Maintenance" are stated in the specification, these shall be read respectively as the "Taking Over Certificate" and "Defects Liability Period".

The Taking-Over Certificate for these works shall be issued upon application by the Contractor under Clause 48.2 of the Conditions of Contract on substantial completion of the construction works. The Defect Liability Certificate will be issued after the end of the Defects Liability Period.

Release of Retention Money will be on issuance of the said certificates.

108 Method of construction

Add the following to this clause:

The submissions of work programme, Order of Work and the General Description of works shall be consistent in presentation and content when handed over for the Engineer's approval and in accordance with programmes and schedules as stated in Clause 14.1 of Conditions of Contract.

Notwithstanding any contrary provision contained in the last paragraph of Clause 108 of the Standard Specification, the Engineer's normal working hours shall be defined as 8:00 a.m. to 5:00 p.m. on weekdays, including lunch break from 1.00 p.m. to 2.00 p.m. and 8:00 a.m. to 1:00 p.m. on Saturdays, with Sunday being set aside as a day of rest. If the contractor wishes to execute permanent works outside these hours, he shall request for and obtain written permission from the Engineer at least one full working day in advance to enable the Engineer to make necessary provision for the supervision of such work. The contractor shall meet any costs arising thereof.

109 Notice of Operations

Name the existing text as 109.1 and add the following:

109.2 Notification Terms

It shall be the Contractor's responsibility to notify the Engineer when any items of the Works scheduled are completed and ready for approval, and the contractor shall give a notice of one full working day to allow control tests to be performed.

117 Health, Safety and Accidents

Insert Sub-clause (i):

In accordance with the laws of Kenya, the Contractor shall make arrangement for awareness programme for public health education and particularly for HIV/AIDS as detailed under Section 26 of this specification.

119 Use of Explosives

Add the following to Clause 119:

The Contractor shall not use explosives without prior written consent of the Engineer. Where the use of explosives is so provided or ordered or authorised, the Contractor shall comply with the requirements of the following beside the law of the land as applicable:

(a) The Contractor shall at all times make full liaison with and inform well in advance and obtain such permission as is required from all Government Authorities, public bodies and private parties whatsoever concerned or affected or likely to be concerned or affected by blasting operations.

(b) The Contractor shall pay all license fees and charges, which may be, required for storage of explosives or in respect of any other matters whatsoever.

(c) The contractor shall be solely responsible for provision, supply, handling, storage and transportation of all explosive ancillary materials and stores and all other things of every kind whatsoever required for blasting operations and shall not delegate or subcontract these activities without the approval of Engineer.

(d) Before the beginning of the Defects Liability Period the Contractor shall remove all unused explosives from the site on completion of the Works or which are ordered by the Engineer, and submit to the Engineer written confirmation of compliance with the instruction.

(e) The Contractor shall submit to the Engineer monthly returns detailing the quantity of explosives brought to the site together with the quantities used during the month and the location and quantity of rock blasted.

120 Protections of Existing Works and Services

Add the following to this Clause:

The cost of determining the location of the existing services together with making good or repairing of any damage caused all to the satisfaction of the Engineer shall be included in the tender rates by the Contractor.

Any damage to, or interference with, existing utilities, caused by the Contractor's operations during the progress of the Works, shall be deemed to be the responsibility of the Contractor who shall undertake to make good at his own expense any damage so caused to the existing underground utilities or other features. The Contractor shall be liable in respect of all claims arising from such damages or interference that may occur.

The Contractor shall be responsible for arranging in liaison with the relevant authorities as soon as the requirements are known for the moving of or alterations to services including power lines, telephone lines, data cables, water mains, sewers and surface water drains which are affected by the works. The arrangements for such moving or alteration shall be subject to the agreement of the Engineer and the relevant authorities.

121 Diversion of services

Add the following to the existing text:

(a) The Contractor shall acquaint himself with the position of all existing services including sewers, water pipes, underground drains, cable for electricity and telephone lines, telephone and lighting poles before commencing any excavation or other work likely to affect these existing services.

(b) The Contractor shall pay any charges arising from the moving of such services for which Provisional Sums have been included in the Bill of Quantities. Subject to the agreement of the Engineer and upon production of receipts, the Contractor shall be reimbursed in Interim Certificates the net cost of such moving or alteration plus the percentage inserted in the Bill of Quantities for all costs and profits in making the payments.

(c) The Contractor shall be entirely responsible for and shall repair at his own cost, any services that may be damaged by his plant, equipment or personnel for not following the laid down procedure of locating and shifting services or damage that may occur subsequent to alteration of such services. The Contractor shall indemnify the Employer against claims arising from damages to existing services or works.

123 Liaison with Government Officials and Police

Add the following to the existing text:

In addition to the requirements of maintaining liaison with Government Officials and Police, the Contractor shall be responsible for acquainting himself with all current and valid ordinances or regulations which may affect the work.

The Contractor's attention is also drawn to his obligations with regard to inspection and examination of the site as stipulated under Clause 11 of the Conditions of Contract.

124 Provision of land

Notwithstanding the provisions of Clause 124 of the Standard Specification, all requirements of land for deviations, quarries, stockpiles, spoil areas and borrow pits when not in the road reserve but required for the construction purposes shall be approved by the Engineer, but the Contractor will make necessary arrangements with the property owners concerned and pay all charges arising thereof on or before completion of the Contract. However, the Employer shall not provide any land for the Quarries, stockpiles, spoil areas and borrow pits and access roads there to.

The Contractor shall remove all temporary works and shall restore all such land to the condition in which it was immediately prior to the occupation thereof as is reasonable and practicable. No separate payment shall be made to the Contractor on account of these items and the contractor shall make due allowances for them in his rates elsewhere.

Any encroachment of the road reserve, for example by kiosks, shall be brought to the Engineer's attention by the Contractor at the earliest opportunity.

125 Water Supply

Add the following to this clause:

The Contractor at his own cost shall obtain necessary permissions from both relevant Government authorities and private parties to draw water from natural sources and private sources respectively.

127 Information from Exploratory Boring and Test Pits

Delete the contents of Clause 127 and substitute with the following:

(a) The Materials Report prepared by the Employer does not form part of the bid documents. However, the report will be made available for the Contractor's verification only and any conclusions in regard to suitability of material, location of borrow pits and material quantities made by the Contractor based on this information, will be his own responsibility.

131 Signboards

Add the following to this clause:

At the commencement of works, the Contractor shall provide and erect two signboards; one on each end of the proposed Project Roads and as instructed by the Engineer. The signboards shall comply with the requirements and detail shown in the Book of Drawings. Any amendments to the details in the Book of Drawings, prior to the signboards being erected, shall be with the approval of the Engineer.

137 Attendance upon the Engineer and His staff

Further to the provisions of Clause 137 of the Standard Specification, the Engineer may instruct the Contractor to provide the staff for attendance to the Resident Engineer in accordance with the following Sub-Clauses:

137.1 Staff employed and paid by the Contractor for attendance upon the Engineer

The Engineer may instruct employment of staff listed below by the Contractor for attendance upon the Resident Engineer. The Contractor shall provide and claim reimbursement under the BOQ.

139 Miscellaneous Accounts

The Contractor maybe instructed by the Engineer to make payments of general miscellaneous accounts for such items as stationary, stores and equipment and miscellaneous supervision personnel and claims or the Engineer may direct the Contractor to purchase or pay for the above. The Contractor will be paid on a prime cost basis plus a percentage for overheads and profits under appropriate items in the Bills of Quantities.

140 Payment of Overtime for Engineer's Junior Staff

In addition to the support staff provided by the contractor, the following shall also constitute part of the Engineer's junior staff:

(a) Assistant Engineer
(b) Inspector of Works
(c) Laboratory Technologist
(d) Administrator
(e) General Clerk
(f) Survey Assistant / Leveler
(g) Secretary
(h) Chainmen
(i) General Attendants

If the Contractor wishes to execute the works on regular basis outside the Engineer's normal working hours as given in Clause 108, over a prolonged period, the Engineer may if he deems it necessary, employ additional supervisory staff for which the required salaries shall be in full by the contractor through the Engineer's office. In addition, the Contractor shall provide the required accommodation for such staff at his own cost. The Contractor shall not be reimbursed any of this cost.

142 Liquidated Damages

Liquidated Damages at the rate indicated in the Appendix to Form of Bid shall apply in the event of the work not being completed within the time for completion plus any extension of time which may be determined by the Engineer. The limit of liquidated damages shall be as indicated in the Appendix to Form of Bid.

143 Protection of the Environment

Further to the requirements of Sub-clause 19.1 of the Conditions of Contract, the Contractor shall be responsible for the following measures to protect the environment.

(a) Compliance with national and local statutes and regulations relating to protection of the environment. The Contractor will be responsible for familiarizing himself with all existing national and local legislation in this regard.

(b) All construction activities shall be carried out using the best possible means to reduce environmental pollution such as noise, dust and smoke. All vehicles and plant shall be regularly serviced in accordance with the manufacturer's recommendations to ensure that they operate efficiently and without excessive noxious emissions. The Engineer will have the authority to instruct the Contractor to temporally cease operations and/or remove from the site vehicles or plant which do not comply with this requirements, until such time that he is satisfied that the best practicable means to reduce environmental pollution to a minimum are being used.

(c) The Contractor shall at all times maintain all sites under his control in a clean and tidy condition and shall provide appropriate and adequate facilities for the temporary storage of all waste prior to disposal.

(d) The Contractor shall be responsible for the safe transportation and disposal of all waste generated as a result of his activities in such a manner as will not give rise to environmental pollution in any form or hazard to human or animal health. In the event of any third party being employed to dispose of waste, the Contractor shall be considered to have discharged his responsibilities under this Clause from the time at which waste leaves sites under his control, providing that he has satisfied himself that the proposed transportation and disposal arrangements are such as will not give rise to pollution or health hazard.

(e) The Contractor shall be responsible for the provision of adequate sanitary facilities for his workforce, and that of his subcontractors at all construction and ancillary sites. The Contractor shall not allow the discharge of any untreated sanitary waste to ground water or any water of ground surface watercourse.

(f) All concrete and asphalt plants shall be operated and maintained in accordance with the original manufacturers specifications and manuals, and in such a manner as to minimize emissions of hydro-carbons and particulate if in the opinion of the Engineer the operation of such plant is causing or is likely to cause nuisance or health problems to the site staff or the general public. The Contractor shall carry out such work as is necessary to reduce emissions to an acceptable level within a time-scale agreed with the Engineer.

(g) The Contractor shall regularly spray with water all exposed dirt surfaces to reduce dust levels.

(h) The Contractor shall take all responsible measures, at all sites under his control to prevent spillage and leakage of material likely to cause pollution of water resources. Such measures shall include but not be limited to the provisions of bunds around fuel, oil and bitumen storage facilities and provision of oil and grease traps for servicing and fuelling areas. Prior to construction of such facilities the Contractor shall submit details of pollution prevention measures to the Engineer for his approval.

(i) The Contractor shall be responsible for ensuring that exposed surfaces are re-vegetated as construction progresses all to the satisfaction of the Engineer.

(j) The removal of trees shall be kept to the minimum necessary to accommodate the permanent works. Prior to the removal of any trees the contractor shall inform the Engineer of the intended operation and obtain the permission of the Engineer for the removal of the trees. If any tree is removed without permission the Contractor shall replace it with an approved tree at no additional cost to the Employer.

(k) The Contractor shall ensure that fires, except for controlled fires for burning rubbish, do not start within the Site or in the environs thereto as a result of the works or from the actions of his employees. The burning of waste, such as vehicle tyres causing noxious emissions is prohibited. The contractor shall have available at all times trained fire-fighting personnel provided with adequate fire-fighting equipment to deal with all fires. The contractor shall additionally at all times provide sufficient fire protection and fighting equipment locally to parts of the works which constitutes particular fire hazards.

No separate payment shall be made in respect of this Clause 142 and the Contractor shall be deemed to have allowed in his general rates and prices for the costs of complying with the requirements of this clause.

144 Off Road Environmental Measures

In addition to the provisions of Clause 142 above and all other requirements of the Conditions of Contract, Standard and Special Specifications, the Employer and the National Environmental Management Authority (NEMA) may order certain environmental measures to be carried out which are off the road and not specifically covered under these provisions. The Contractor shall carry out such works with equipment, labour and plant provided under the Contract or shall make such arrangements for specialized works to be carried out by a specialized subcontractor.

The Contractor shall be paid for all direct expenses under a provisional Sum in the Bill of Quantities and a percentage (%) for his handling costs and profits.

145 Staff Training

The Contractor shall allow for training of engineers, technicians and other support staff as may be instructed by the Engineer.

The payment of the allowances of such staff shall be made as instructed by the Engineer under the relevant item of the Bills of Quantities.

300 SETTING OUT AND TOLERANCES

301 Setting Out

(a) General

If traverse points to be used for setting out are close to the existing carriageway and interfere with the construction works, the Contractor shall relocate them to a location where they will not be disturbed. The coordinates and heights of all transverse points so relocated shall be listed and provided to the Engineer for checking and/or approval. The Contractor shall also reference with monuments the new road centrelines every 200 m long straight sections and at all salient points along curves, consisting of a pin in a concrete beacon, before commencement of any works.

The roads reserve boundary posts shall have 12 mm diameter steel pins, 200 mm long embedded in concrete with 25 mm exposed and sticking from the top surface. This pin shall be coordinated and heightened and details of the same shall be provided to the Engineer for approval.

(b) Detailed setting out

Reference pegs shall be 50 mm x 50 mm in cross section, 600 mm long driven 400 mm firmly into the ground and painted white above ground level. The offset from the centreline shall be indicated by a small nail, 20-25 mm long, with its head driven flush with the top of the peg. Chainages, chainage offsets and reference elevation shall be clearly marked on the sides of the peg to the satisfaction of the Engineer.

600 QUARRIES, BORROW PITS, STOCKPILE AND SPOIL AREAS

601 General

The Employer will not make available to the Contractor any land for quarries, borrow pits, stockpile and spoil areas, except for those in the road reserves and specifically approved by the Engineer.

The Contractor will be entirely responsible for locating and providing suitable sources of materials complying with the specifications and for procurement, winning, haulage to site of these materials, rehabilitating the borrow pits, quarries, stockpile and spoil areas, and all costs involved therein. Similarly, the Contractor will be responsible for provision of areas for stock piling materials and disposal of spoil dumps or stockpiling within the road reserve. The Contractor may utilize them subject to the approval of the Engineer.

No additional payment will be made to the Contractor to cover costs arising from the requirement of this clause. The Contractor shall include the costs of complying with this clause in the rates and prices inserted elsewhere in the Bill Of Quantities.

800 CULVERT AND DRAINAGE WORKS

804 Excavation for Culverts and Drainage Works

In the Standard Specification make the following amendments on this clause:

In paragraph 6, line 3, in paragraph 7, line 5 and in paragraph 11, line 6, delete reference to “95%” and insert “100%”.

805 Excavation in Hard Material

In the Standard Specification, sub-clause 805 (a) and (b) delete reference to “95%” and insert “100%”.

.

809 Bedding and Laying of Pipe Culverts

In the Standard Specification, sub-clause 809 (a), delete reference to "95%" and insert "100%".

Add the following to Clause 809:

(d) Laying, Bedding and Surround for Culverts Cast In-situ

In addition to the requirements of the Standard Specification, where inflatable balloon method of casting culverts in-situ is used, it is essential that thorough pre-construction trials are carried out and necessary adjustments made to ensure that:

(i) All concrete used for surround and the top 50 mm or 80 mm of bedding for culverts shall be Class 30/20 while the rest of the concrete shall be class 20/20.

(ii) The inner concrete barrel surface immediately in contact with the inflated balloon form during placing shall achieve Class F3 finish.

(iii) Cement to be used shall be cement 42.5

810 Jointing Concrete Pipes

In addition to the requirement of Clause 810 of the Standard Specification, all precast concrete pipes shall be ogee jointed pipes laid with a 1:2 (cement: sand) mortar and provided with fillets on the outside and as described in the Standard Specification.

812 Backfill

In the Standard Specification make the following amendments to this clause:

(a) Wherever the expression "dry density of 95% (AASHTO T99)" occurs, this expression shall be deleted and replaced with "dry density of 100% (AASHTO T99)".

(b) Delete paragraph 6: "For pipes culverts…depth of 150 mm", entirely.

816 Minor Drainage Structures

Add the following to this clause:

(a) Concrete Lined Drains

The exposed surfaces of concrete lined drains shall be a class UF2 finish. Concrete lined drains shall be constructed to the same standard as the minor drainage structures.

(b) Cast in situ chutes on side slopes

Where pre cast chutes are provided, refer to Section 1 of this the specifications.

817 Mitre Drains, Cut-off Drains, Catch Water/Drains, Outfall Drains and Earth Dams

Rename the existing text as 817.1 and add the following sub-clauses:

817.2 Cleaning Existing Drains

Where instructed by the Engineer, the Contractor shall clear blocked side drains and/or outfall drains to a free flowing condition. The work shall consist of but not be limited to:

- Stripping and removal of extraneous material including vegetation and roots to spoil
- Carting away and spreading any spoil to the satisfaction of the Engineer, and

- Reshaping the drains to a free flowing profile.

817.3 Cleaning of Hydraulic Structures

Where instructed by the Engineer, the Contractor shall clean the existing hydraulic structures by removing all undesirable material in the structures to ensure they are clean and free flowing. The Contractor shall dispose of all the silt and other undesirable material to spoil. After the cleaning out of structures, the Contractor shall be responsible for maintaining the hydraulic structures in a clean condition for the duration of the Contract.

817.4 Removal of Existing Pipes, Inlet and Outlet Structures

The Contractor shall remove existing concrete pipes where instructed by the Engineer including bedding, surround, inlet and outlet structures. Concrete shall be disposed of as directed by the Engineer. Masonry structures where in a good condition shall be preserved to reuse as may be directed by the Engineer. Additional material shall be added to the void left after removal of these pipes and structures and shall be carefully compacted to 100% MDD (T99). The void shall then be preserved for placement of any new pipes or construction of new structures.

The existing inlet and outlets structures, where in good condition, and reusable as beds to pipe extensions, shall not be removed. Any such structures removed without the Engineer's approval shall be restored to the original condition at the Contractor's expense.

817.5 Extension of Existing Pipes

Where shown on the drawings or instructed by the Engineer, the Contractor shall extend the existing concrete pipes. Part of the existing pipe surround shall be broken and concrete collar constructed as shown on the drawings. The extension shall be backfilled to the same standards as for new pipes.

817.6 Chute drain for High Embankment Sections

(a) Scope

This work shall consist of construction of chute drain on the slope of the road embankment including erosion protection works at the locations and to dimensions shown on the Drawings or as directed by Engineer. The schedule of works shall be so arranged that the drains are completed in proper sequence with roadway to ensure that no damage is caused due to lack of drainage.

(b) Materials

The drains shall be of half round pipe of 600 mm dia. formed by joining pre-cast semicircular RCC sections at site as shown in the drawings. The RCC work shall conform to the relevant clauses of these specifications.
The toe wall below ground level shall be of brick masonry in cement mortar 1:4 or plain cement concrete of class 15/20, as shown on the Drawings.

Dumped riprap for erosion protection at ground level shall be hard, unweathered and durable rubble stone of size 150 mm to 250 mm.

(c) Construction Operations

Excavation for fixing drain sections at the locations where the chute drains are to be installed, a semi-circular cut on the side slope of the embankment along the line of the chute drain shall be made in such a way that the RCC drain sections could be fixed snugly with their edges flush with the adjoining embankment slope. The sloping bed of the drain shall be to a regular line and suitably compacted to provide a firm bed.

900 PASSAGE OF TRAFFIC

903 Maintenance of Existing Road

Amend as follows:

The Engineer shall hand over the existing road to the contractor, in sections, at the commencement of the Contract for construction purpose. However, the Contractor shall be responsible for all repairs and maintenance of the entire road package for the duration of the Contract. The existing road is bituminous and the Contractor shall maintain it with asphalt materials or other materials similar to those of the existing pavement layers. The Contractor shall regularly inspect the road and carry out such repairs and maintenance to the satisfaction of the Engineer. If at any time the Engineer draws the Contractor's attention to a road section which requires maintenance the Contractor shall promptly repair the section. The Contractor shall be legally responsible for any accident or damage attributable to his failure to maintain the road.

Add the following to this clause:

903.1 Maintenance of Right of Way

Throughout the period of the Contract the Contractor shall at all times maintain public vehicular access to the right of way, within the right of way and from the right of way to all public and private land, as it was immediately prior to his commencement of the Works.

The Contractor may, on submission of written request to the Engineer, including a drawing, programme and specification, be given approval to operate:

(a) A road diversion suitable for the road traffic and suitable width or

(b) Traffic on a one way system using manual coordinated direction control or automatic traffic lights having a secure source of power.

Applications for approval shall show every detail of the proposals including road construction cross section including pavement, surfacing, profile and drainage, road signing, communication between the ends of the controlled section lighting and the proposed period of operation.

One way systems shall be provided with adequate sign posting and the Contractor shall limit delays to any traffic to the minimum and with the approval of the Engineer. The travelling public shall be notified by signs, of exceptional delay well in advance of the site of delay, as required by the Engineer.

Payment for temporary diversions, traffic provisions and maintenance of roadways shall be as provided in the Contract and as instructed by the Engineer.

904 Construction of Deviations

Add the following paragraph between the second and the third paragraphs of Item (a):

The Contractor shall programme his works in such a way that traffic shall not be required to pass over more than 1.5 km at any one time unless otherwise approved by the Engineer.

906 Passage of Traffic through the Works

Add the following to this Clause.

The Contractor shall be deemed to have inspected the site and satisfied himself as to the adequacy of his bid for these works and no additional payments will be made for any expenditure on traffic control. Should the Contractor propose any other method of passage of traffic including construction of traffic deviations and use of the existing roads the Contractor shall investigate the alternatives, construct and maintain them to the satisfaction of the Engineer. The Employer shall not be liable for investigations or costs arising from the alternatives methods of traffic control proposed by the Contractor. Deviations or other measures for traffic control where proposed by the Contractor shall meet the requirements of the specifications and drawings and be approved by the Engineer.

The Contractor shall ensure that the workforce and site supervisory staff at all times wear high visibility garments when work is carried out on or adjacent to a section of the road open to traffic. The Contractor shall ensure that the supervisor or person in charge of the work force is readily recognized from the rest of the workforce. In addition, the Contractor shall provide a full time traffic safety officer to coordinate aspects of road safety for the whole site.

The Contractor shall be deemed to have included all costs related to employing the traffic safety officer and for all the duties performed by him in his rate for passage of traffic.

912 Measurement and payment

(a) Item: Construction of Deviation

Amend as follows:

The rate for construction of deviation shall include provision, placing, forming and compaction of gravel sub-base, stone base and bituminous wearing courses.

(b) Item: Provide and Maintain Road Signages

Unit: Lump Sum

Payment of the lump sum shall be through equal monthly instalments over the period of the Contract on a pro rata basis subject to the approval of Engineer.

(b) Item: Maintain existing Roads and deviations

Unit: Lump Sum

Payment of the lump sum shall be paid per kilo metre length the period of the Contract, excluding the Defects Liability Period provided that the total sum of instalments paid shall not exceed the lump sum; and

(i) If any month the Engineer is not fully satisfied that the Contractor has fully complied with all the provisions of this sub-section, the Employer shall withhold the whole of the instalments due to the Contractor and the Engineer shall, in addition, deduct from any monies due to the Contractor a sum of Kshs 150,000 per day for the period of non compliance from the date of the Engineer's notice for that month.

(ii) Where notified by the Engineer the contractor shall complete maintenance on a section or sections of the road so notified within 14 days. Provided further that, if the Contractor fails to complete maintenance on any section within 14 days of the Engineer's notification thereof, the Engineer shall deduct Kshs. 200,000 for delay per day.

(c) Item: Reinstatement of Deviations

In the first paragraph of Clause 912 (h), delete the words "by the lump sum stated in the Special Specification' and replace with 'as described under Item 9.04 of the Bill of Quantities".

SECTION 10 – GRADING AND GRAVELLING

1001 GENERAL

Grading covers the works involved in the reinstatement of the road carriageway to the camber by removing the high points and filling up gullies, corrugations and wheel ruts to restore smooth running surface. Gravelling consists of excavation, loading, hauling, spreading, watering and compaction of gravel or softstone wearing course material on the formation of the road carriageway.

Ditch and Shoulder grading

The activity consists of cutting of a V – ditch and reinstating or reforming of the shoulders of road using either Towed or Motor grader.

Carriageway grading

(i) Light grading

This consists of trimming of the carriageway to control roughness and corrugations using either a towed grader or a motorized grader.

(ii) Heavy grading

This consists of scarifying the existing carriageway surface, cutting high spots and moving materials to fill potholes, corrugations and wheel ruts and reshaping of the surface to the specified camber, using either a towed grader or a motorized grader. All loose rocks, roots, grasses shall be removed and disposed well clear off the drains.

Heavy grading will be considered if 70% of the road has potholes, corrugations and wheel ruts of over 200mm deep.

The material shall be bladed toward the center of the road starting from both edges until the specified camber is achieved.

1002 MATERIALS

Gravel shall include lateritic gravel, quartzitic gravel, calcareous gravel, decomposed rock, softstone/quarry waste material, clayey sand and crushed rock.

1003 MATERIAL REQUIREMENTS

Gravel material shall conform to the requirements given below:

GRADING REQUIREMENTS AFTER COMPACTION	
Sieve (mm)	% by weight passing
40	100
28	95 – 100
20	85 – 100
14	65 – 100
10	55 – 100
5	35 – 92
2	23 – 77
1	18 – 62
0.425	14 – 50
0.075	10 - 40

PLASTICITY INDEX REQUIREMENTS PI		
Zone	Min	Max
WET	5	15
DRY	10	25

BEARING STRENGTH REQUIREMENTS		
Traffic Commercial VPD	CBR	DCP Equivalent mm/Blow

Greater than 15	20	11
Less than 15	15	14
CBR at 95% at MDD, Modified AASHTO and 4 days soak		
Lower quality material (CBR 15) may be accepted if no better material can be found		

NB: Wet Zone – mean annual rainfall greater than 500mm
Dry Zone – mean annual rainfall less than 500mm

.

SECTION 9: BILLS OF QUANTITIES

PREAMBLE TO BILL OF QUANTITIES

1. The Bill of Quantities shall form part of the Contract documents and is to be read in conjunction with Instructions to Bid, Conditions of Contract, Specifications and Drawings.

2. The brief description of the items in the Bill of Quantities is purely for the purpose of identification, and in no way modifies or supersedes the detailed description given in the Conditions of Contract and specification for the full direction and description of work and materials.

3. The Quantities set forth in the Bill of Quantities are estimated and provisional representing substantially the work to be carried out and given to provide a common basic for bidding and comparing the bids. There is no guarantee to the Contractor that he will be required to carry out all the quantities of work indicated under any one particular item or group of items in the Bill of Quantities. The basic of payment shall be the Contractor's rates and the quantities of work actually done in fulfilment of his obligation under the Contract.

4. The prices and rates inserted in the Bill of Quantities will be used for valuation of the work executed and the Engineer will measure the whole of the works executed in accordance with this Contract. A price or rate shall be entered in link against every item in the Bill of Quantities with the exception of items which already have provisional sums affixed thereto. The bidders are reminded that no "nil" or "included" rates or "lump-sum" discounts will be accepted. The rates for various items should include discount if any. Bidders who fail to comply with this will be disqualified.

5. Provisional Sums (including Dayworks) in the Bill of Quantities shall be expended in whole or part at the discretion of the Engineer in accordance with Subclause 52.4 and Clause 58 of the Conditions of Contract.

6. The price and rates entered in the Bill of Quantities shall, except insofar as it is otherwise provided in the Contract , include all constructional plants to be used, labour, insurance, supervision, compliance, testing, materials, erection, maintenance of works overhead and profit, taxes and duties together with the general risks, liabilities and obligations set out or implied in the Contract , transport, electricity and telephone, water, use and replenishment of all consumables, including those required under the Contract by the Engineer and his staff.

7. Errors will be corrected by the Employer for any arithmetic error in computation or summation as stipulated under Clause 28 of the Instructions to Bidders.

8. The Bill of Quantities, unless otherwise expressly stated therein, shall be deemed to have been prepared in accordance with the principle of the latest edition of the Civil Engineering Standard Method of Measurement (CESMM)

9. "Authorised" "Directed "or "Approved" shall mean the authority, direction or approval of the Engineer.

10. Unless otherwise stated, all measurement shall be net on the finished work carried out in accordance with the details shown on the drawings or instructed, with no allowance for extra cuts or fills, waste or additional thickness necessary to obtain the minimum finished thickness or dimensions required in this Contract. Any work performed in excess of the requirements of the plans and specifications will not be paid for, unless ordered in writing by the Engineer.

11. Hard/rock materials in this Contract, shall be defined as the material which, in the opinion of the Engineer, require blasting, or the use of metal wedges and sledge hammers, or the use of compressed air drilling for their removal, and which cannot be extracted by ripping with a dozer tractor of at least 150 brake horse power (112 kilowatt) with a single rear–mounted hydraulic ripper Boulders of more than 0.2 m^3 occurring in soft materials shall be classified as hard material

(m) Soft materials shall be all material other than hard material as defined under Item (l) above.
(n) The units of measurement and abbreviations tabulated below are used herein

Unit	**Abbreviation**
Number	№
Millimetre	mm
Square millimetre	mm² / sq mm
Metre	m
Square metre	m² / sq m
Cubic metre	m³ / cu m
Hectare	ha
Kilogramme	kg
Lump sum	LS
Prime Cost	PC
Tonne	Tonne
Metric ton (100 kg)	t / tonne
Degrees centigrade	ºC
Hour	h / hr
Week	wk
Month	mth
Horsepower	HP
Kilowatt	KW

BILLS OF QUANTITIES

PROJECT NAME: ROUTINE MAINTENANCE OF CHEBOLE-KAPANGOROR-SUMONI-KAPTULWA ROAD (4.5KM)

SUB-COUNTY: SOTIK **WARD: KIPSONOI**

ITEM No.	DESCRIPTION	UNIT	QNTY	RATE	AMOUNT
	BILL 1: PRELIMINARIES AND GENERAL ITEMS				
01-60-005	Provide and install County Government Publicity Sign board as per the details given by the Engineer	No.	2		
01-60-002	Allow a PC sum for survey works	PC	1	50,000.00	50,000.00
01-80-010	Allow a PC Sum for materials testing as directed by the Engineer	PC	1	70,000.00	70,000.00
01-50-015	Allow a PC Sum for Condition survey	PC	1	100,000.00	100,000.00
	Total Carried Forward to Summary				

	BILL 4: SITE CLEARANCE				
04-50-004	Bush clearing as directed by the Engineer	LB	18000		
04-50-006	Tree cutting and stump removal (200 -450 mm)	Dayworks	50		
	Total Carried Forward to Summary				
	BILL 8: CULVERTS AND DRAINAGE WORKS				
08-60-030	Excavate in soft material for pipe culverts, headwalls, wingwalls,aprons , toewalls and drop inlets	m^3	152.1		
08-60-033	Provide, lay and joint 900 mm ID precast concrete pipes	m	35		
08-60-033	Provide, lay and joint 1200 mm ID precast concrete pipes	m	16		
08-60-035	Provide, place and compact class 15/20 concrete to beds, surrounds and haunches.	m^3	51.225		
08-60-036	Provide, place and compact class 25/20 concrete to headwalls, wingwalls, aprons and toe walls to pipe culverts including formwork.	m^3	20.7		
08-60-037	Provide and place A142 BRC mesh reinforcement	m^2	138		
08-90-001	Excavate for inlet, outfall, catchwater drains, mitre and cut-off drains in soft material	m^3	114.075		
	Total Carried Forward to Summary				

	BILL 10: GRADING AND GRAVELLING				
10-50-003	Light grading as directed by the Engineer	M^2	31,500		
10-60-001	Provide, spread, water and compact lateritic (natural) gravel to 150mm thickness at 95%MDD	M^3	2430		
	Total Carried Forward to Summary				
	BILL 25: CROSS CUTTING ISSUES				
25-01-001a	Allow a PC sum for HIV/AIDs prevention campaigns	PC	1	50,000	
25-01-001b	Include percentage of PC sum in item 01-80-034 for contractors overhead and profit	%	50,000		
25-01-002a	Allow a PC sum for Environmental Mitigation	PC	1	50,000	
25-01-002b	Include percentage of PC sum in item 01-80-034 for contractors overhead and profit	%	50,000		
	Total Carried Forward to Summary				

SUMMARY OF BILL OF QUANTITIES

Item No.	Description	Amount (KShs)
1	GENERAL: PRELIMINARIES AND GENERAL ITEMS	
4	SITE CLEARANCE	
8	CULVERTS AND DRAINAGE WORKS	
10	GRADING AND GRAVELLING WORKS	
25	CROSS CUTTING ISSUES	
	Sub Total	
	VAT @ 16 %	
	GRAND TOTAL(Ksh) CARRIED TO FORM OF BID	

SECTION 10: DRAWINGS

FIGURE C.1 - CULVERT ENTRY / EXIT STRUCTURE TYPES

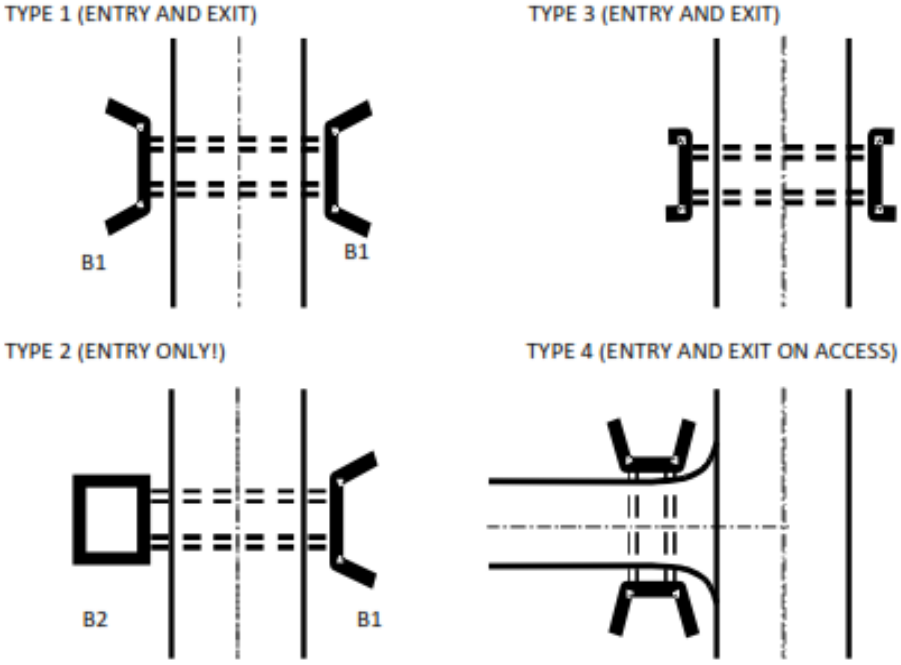

NOTE:

Coding system has been used in describing the standardised designs of the various culvert entry and exit structures. The code names consist of a number
to specify shape and function as elaborated in above while the used construction materials are identified through an alphabetic symbol as follows:

A = Concrete block
B = Stone masonry
C = Dressed stones

An example code of "B2" would therefore stand for a drop inlet type structure to be built in stone masonry.

FIGURE C.2 - HEADWALL TYPE 1 (HEAD AND WINGWALLS)

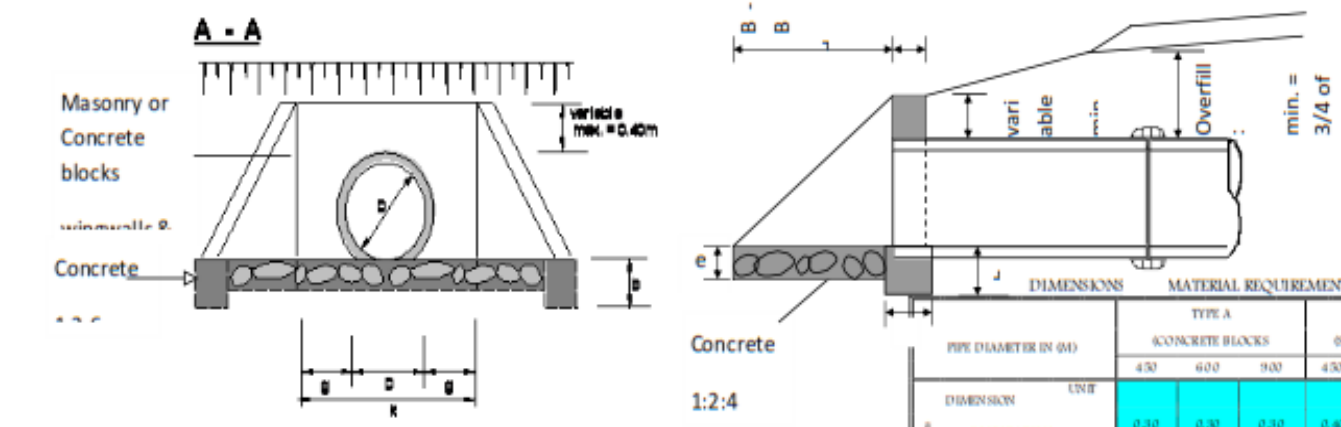

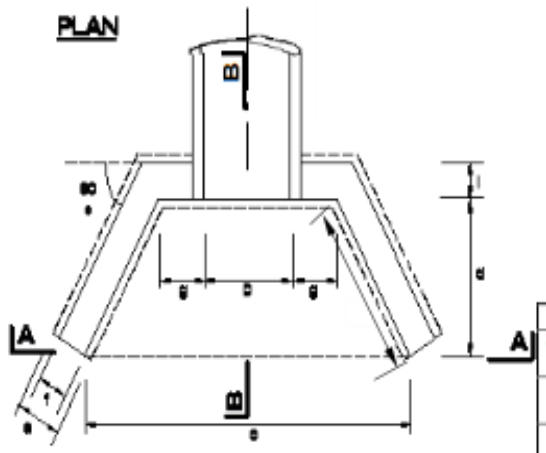

CULVERT PIPES	
X-SECTION WIDTH	No. of Pipes
4.50	6.00
5.50	7.00
6.50	8.00

DIMENSIONS MATERIAL REQUIREMENTS

PIPE DIAMETER IN (M)			TYPE A (CONCRETE BLOCKS)			TYPE B (STONE MASONRY)		
			450	600	900	450	600	900
DIMENSION		UNIT						
a	FOUNDATION	m	0.30	0.30	0.30	0.40	0.40	0.60
B	FOUNDATION	M	0.30	0.30	0.40	0.30	0.30	0.40
c	FOUNDATION		2.20	2.35	2.89	2.20	2.35	2.89
d	APRON	m	1.00	1.00	1.20	1.00	1.00	1.20
e	APRON	m	0.20	0.20	0.20	0.20	0.20	0.20
f	WALL	m	0.20	0.20	0.20	0.40	0.40	0.40
g	WALL	m	0.30	0.30	0.30	0.30	0.30	0.30
h	WALL	m	1.15	1.15	1.39	1.15	1.15	1.39
i	WALL	m	0.20	0.20	0.20	0.40	0.40	0.40
k	APRON	m	1.05	1.20	1.50	1.05	1.20	1.50
MATERIAL REQUIREMENT								
FOUNDATION (Concrete)		m^3	0.3	0.32	0.51	0.4	0.42	1.03
HEAD/WINGWALLS (Concrete/Masonry)		m^3	0.4	0.47	0.67	0.8	0.93	1.35
APRON (Concrete)		m^3	0.33	0.36	0.53	0.33	0.36	0.53

FIGURE C.3 - HEADWALL TYPE 2 (DROP INLET)

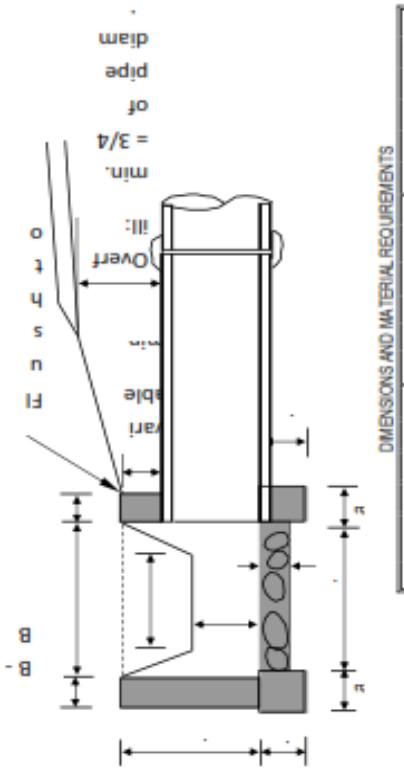

DIMENSIONS AND MATERIAL REQUIREMENTS

PIPE DIAMETER IN (M)			TYPE A (CONCRETE BLOCKS)			TYPE B (STONE MASONRY)		
	DIMENSION	UNIT	450	600	900	450	600	900
a	FOUNDATION	m	0.30	0.30	0.30	0.40	0.40	0.40
B	FOUNDATION	M	0.30	0.30	0.30	0.30	0.30	0.30
c	FOUNDATION	m	1.10	1.10	1.40	1.20	1.20	1.50
d	APRON	m	0.90	0.90	0.90	1.00	1.00	1.00
e	APRON	m	0.20	0.20	0.20	0.20	0.20	0.20
f	DROP INLET	m	0.60	0.60	0.60	0.60	0.60	0.60
g	DROP INLET	m	0.30	0.40	0.60	0.30	0.40	0.60
h	DROP INLET	m	0.60	0.80	1.20	0.60	0.80	1.20
i	DROP INLET	m	0.20	0.20	0.20	0.40	0.40	0.40
k	DROP INLET	m	1.20	1.20	1.50	1.20	1.20	1.50
l	DROP INLET	m	1.00	1.00	1.00	1.00	1.00	1.00
m	DROP INLET	m	0.36	0.30	0.30	0.36	0.30	0.30
MATERIAL REQUIREMENT								
FOUNDATION (Concrete)		m^3	0.47	0.47	0.52	0.72	0.72	0.79
HEADWINGWALLS (Concrete/Masonry)		m^3	0.53	0.69	1.11	1.24	1.63	2.61
APRON (Concrete)		m^3	0.24	0.24	0.30	0.24	0.24	0.30

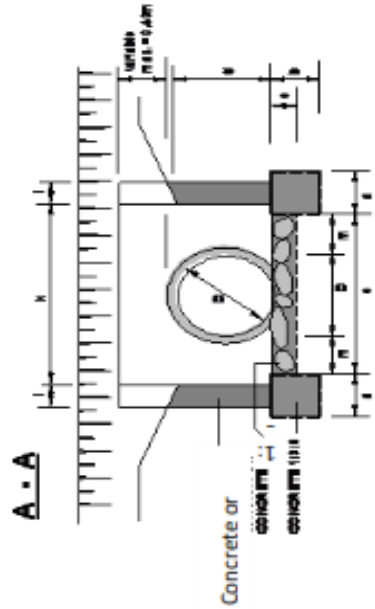

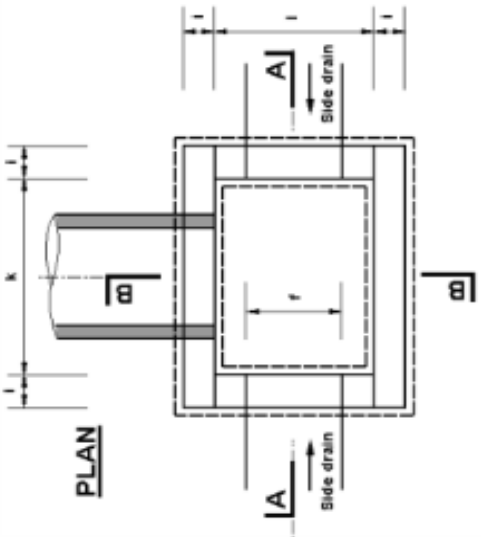

FIGURE C.4 - HEADWALL TYPE 3A (CONCRETE BLOCK HEADWALLS)

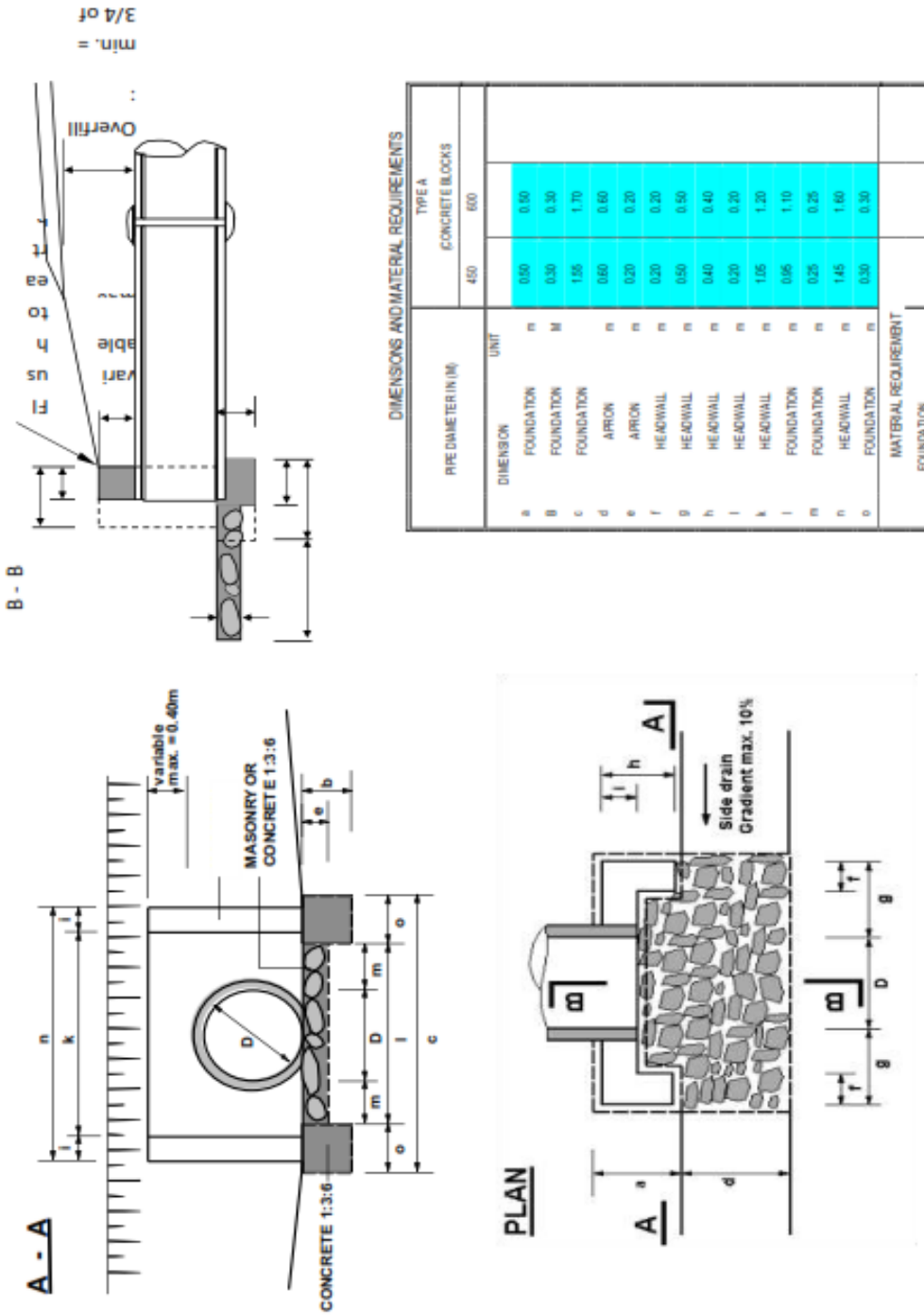

FIGURE C.5 - HEADWALL TYPE 3B (STONE MASONRY HEADWALLS)

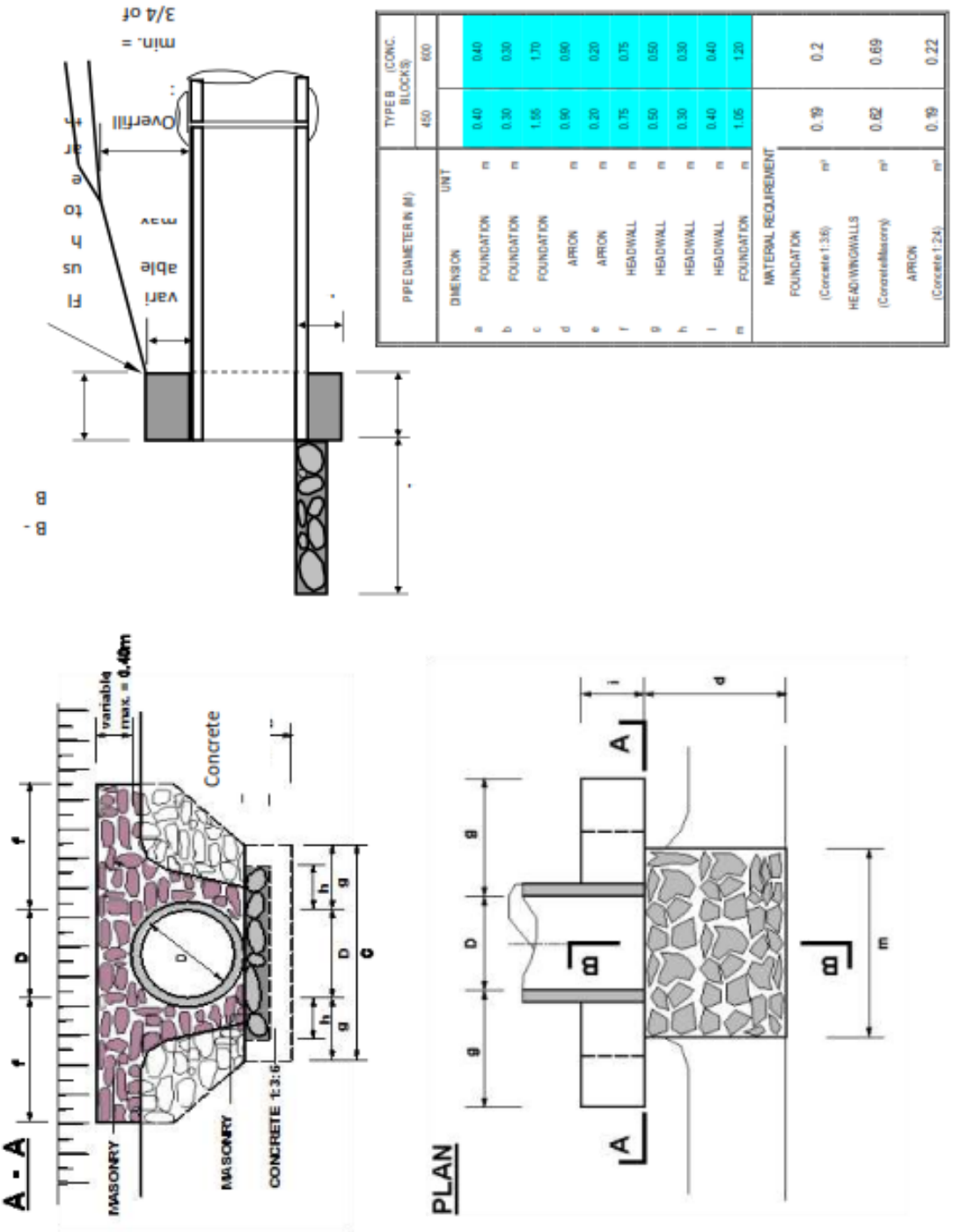

FIGURE C.6 - HEADWALL TYPE 4 (FOR ACCESS CULVERTS)

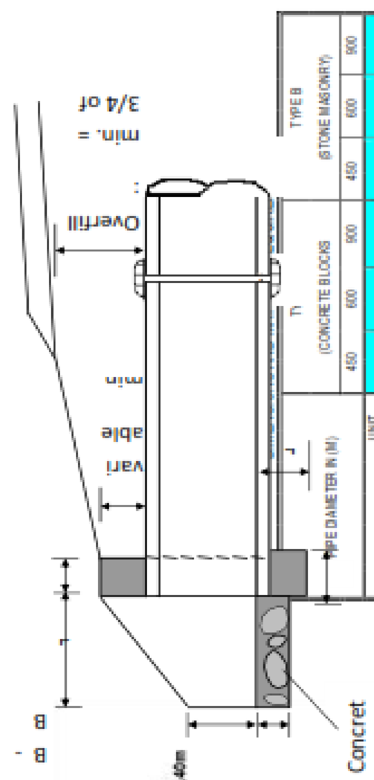

PIPE DIAMETER IN (M)			TYPE A (CONCRETE BLOCKS)			TYPE B (STONE MASONRY)		
			450	600	900	450	600	900
DIMENSION		UNIT						
a	FOUNDATION	m	0.30	0.30		0.40	0.40	
B	FOUNDATION	M	0.30	0.30		0.30	0.30	
c	APRON		1.34	1.49		1.34	1.49	
d	APRON	m	0.60	0.60		0.60	0.60	
e	APRON	m	0.20	0.20		0.20	0.20	
f	WINGWALLS	m	0.20	0.20		0.40	0.40	
g	WINGWALLS	m	0.10	0.10		0.10	0.10	
h	HEADWALLS	m	0.69	0.69		0.69	0.69	
i	HEADWALLS	m	0.20	0.20		0.40	0.40	
k	HEADWALLS	m	0.65	0.80		0.65	0.80	
l	HEADWALLS	m	0.40	0.40		0.40	0.40	
MATERIAL REQUIREMENT								
	FOUNDATION (Concrete 1:2:4, 1:3:6)	m³	0.18	0.2		0.24	0.26	
	HEADWINGWALLS (Concrete/Masonry)	m³	0.25	0.29		0.50	0.58	
	APRON (Concrete)	m³	0.12	0.14		0.12	0.14	

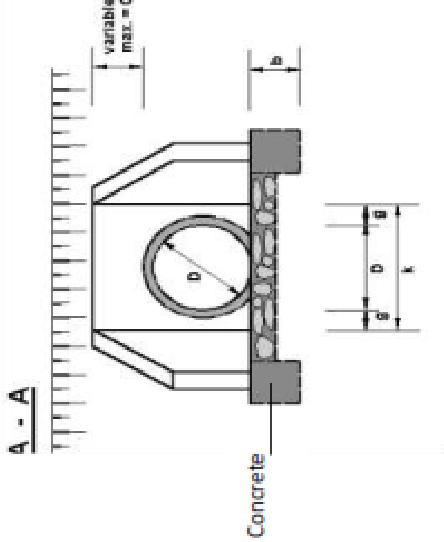

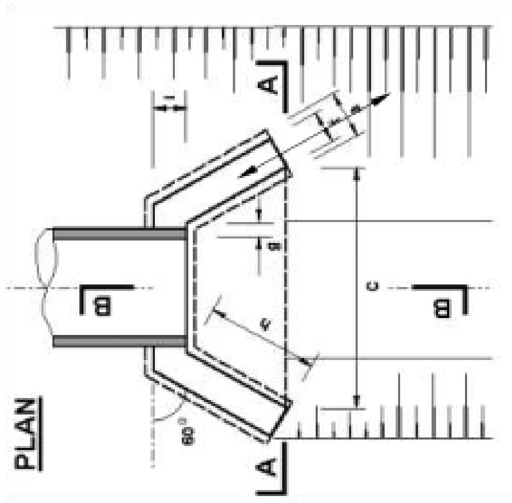

FIGURE C.7- BEDDING AND HAUNCH PROFILES TYPES I & II

PROFILE I

(CONCRETE)

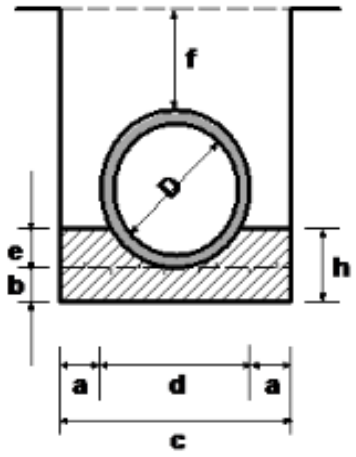

Diameter (D)	450 (mm)	600 (mm)	900 (mm)
	Dimensions in (m)		
a	0.15	0.2	0.2
b	0.1	0.15	0.15
c	0.86	1.12	1.48
d	0.56	0.72	1.08
e	0.14	0.18	0.27
f (min.)	0.34	0.45	0.68
g	-	-	-
h	0.24	0.33	0.42
i	-	-	-
Concrete	Volume in (m3/m)		
	0.16	0.3	0.48
Application	- Fair subgrade condition; - Overfill > ¾ Diameter; - Seasonal waterflow only.		
Remarks	- Use gravel material for back/ overfill.		

PROFILE II

(CONCRETE)

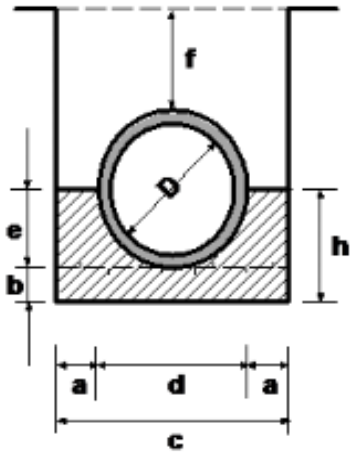

450 (mm)	600 (mm)	900 (mm)
Dimensions in (m)		
0.15	0.2	0.2
0.1	0.15	0.15
0.86	1.12	1.48
0.56	0.72	1.08
0.28	0.36	0.54
0.34	0.45	0.68
-	-	-
0.38	0.51	0.69
-	-	-
Volume in (m3/m)		
0.2	0.37	0.56
- Fair to poor subgrade Condition; - Overfill > ¾ Diameter; - Seasonal waterflow only.		
- Use gravel material for back/ overfill.		

FIGURE C.8 - BEDDING AND HAUNCH PROFILES TYPES III & IV

PROFILE III

(CONCRETE)

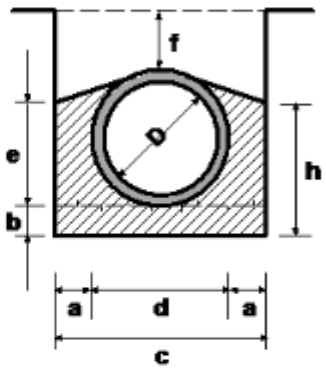

PROFILE IV

(CONCRETE)

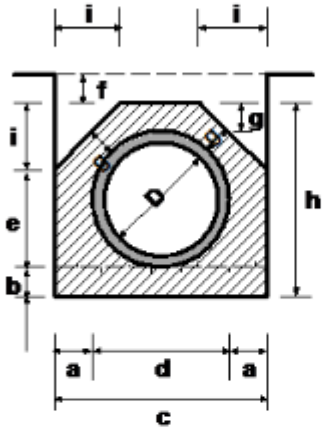

Diameter (D)	450 (mm)	600 (mm)	900 (mm)
	Dimensions in (m)		
a	0.15	0.2	0.2
b	0.1	0.15	0.15
c	0.86	1.12	1.48
d	0.56	0.72	1.08
e	0.42	0.54	0.81
f (min.)	0.23	0.3	0.45
g	-	-	-
h	0.52	0.69	0.96
i	-	-	-
Concrete	Volume in (m3/m)		
	0.26	0.47	0.71
Application	- Fair subgrade condition; - Overfill > ¾ Diameter; - Seasonal waterflow only.		
Remarks	- Use gravel material for back/ overfill.		

450 (mm)	600 (mm)	900 (mm)
Dimensions in (m)		
0.15	0.2	0.2
0.1	0.15	0.15
0.86	1.12	1.48
0.56	0.72	1.08
0.46	0.52	0.78
0.15	0.15	0.15
0.15	0.15	0.15
0.81	1.02	1.38
0.28	0.35	0.45
Volume in (m3/m)		
0.37	0.61	0.92
- Fair to poor subgrade Condition; - Overfill > ¾ Diameter; - Seasonal waterflow only.		
- Use gravel material for back/ overfill.		

FIGURE C.8 - BEDDING AND HAUNCH PROFILES TYPES III & IV

PROFILE III

(CONCRETE)

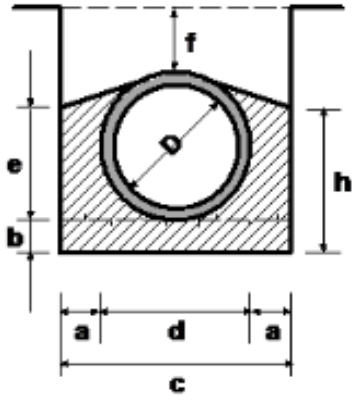

PROFILE IV

(CONCRETE)

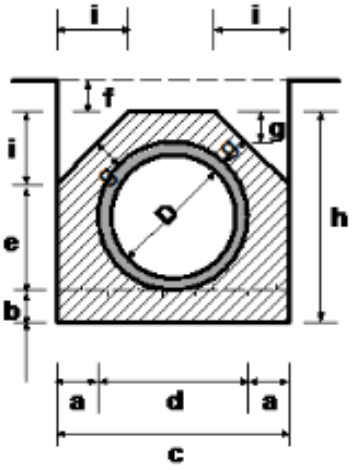

Diameter (D)	450 (mm)	600 (mm)	900 (mm)
	Dimensions in (m)		
a	0.15	0.2	0.2
b	0.1	0.15	0.15
c	0.86	1.12	1.48
d	0.56	0.72	1.08
e	0.42	0.54	0.81
f (min.)	0.23	0.3	0.45
g	-	-	-
h	0.52	0.69	0.96
i	-	-	-
Concrete	Volume in (m3/m)		
	0.26	0.47	0.71
Application	- Fair subgrade condition; - Overfill > ¾ Diameter; - Seasonal waterflow only.		
Remarks	- Use gravel material for back/ overfill.		

450 (mm)	600 (mm)	900 (mm)
Dimensions in (m)		
0.15	0.2	0.2
0.1	0.15	0.15
0.86	1.12	1.48
0.56	0.72	1.08
0.46	0.52	0.78
0.15	0.15	0.15
0.15	0.15	0.15
0.81	1.02	1.38
0.28	0.35	0.45
Volume in (m3/m)		
0.37	0.61	0.92
- Fair to poor subgrade Condition; - Overfill > ¾ Diameter; - Seasonal waterflow only.		
- Use gravel material for back/ overfill.		

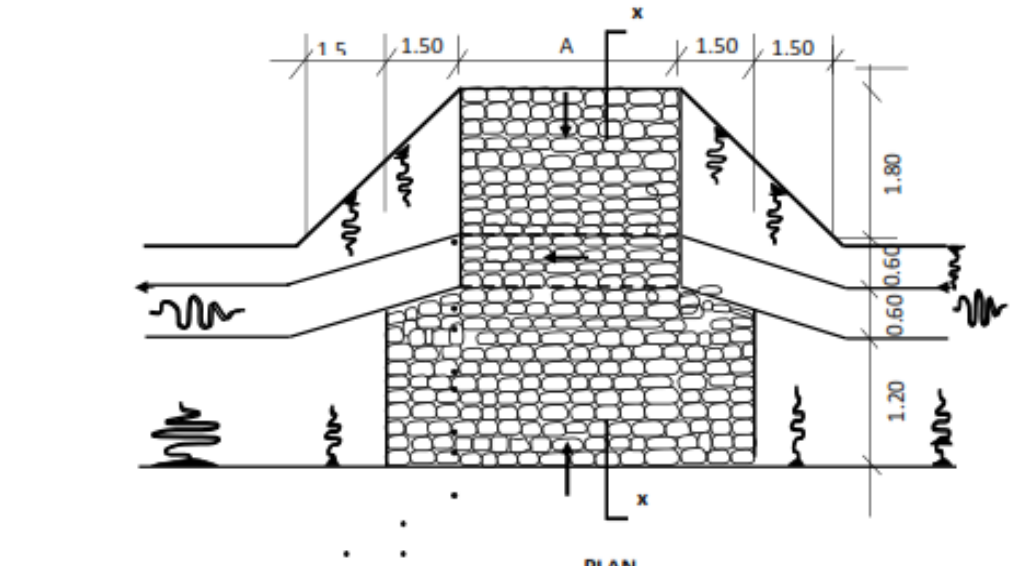

PLAN

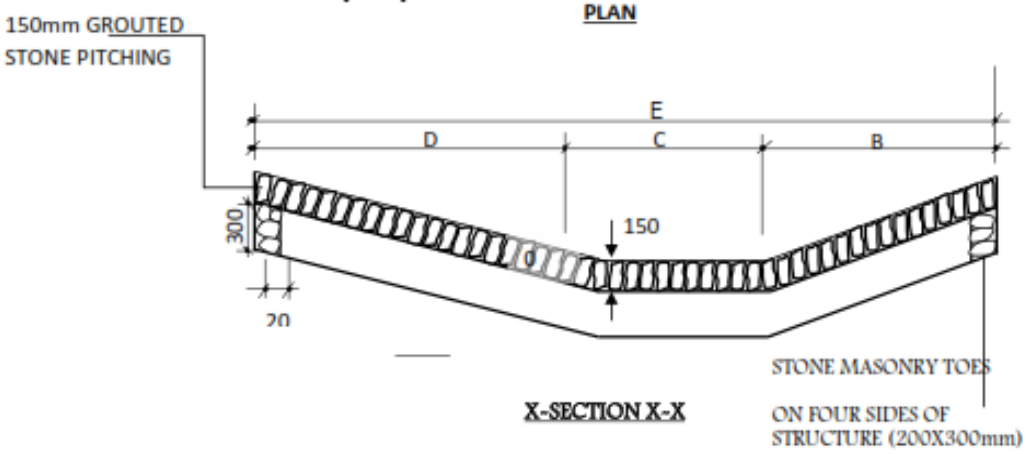

X-SECTION X-X

QUANTITIES TABLE

Cross section	DIMENSIONS					RED Excavation (m3)	Stone masonry (m³)	150mm Grouted stone pitching (m3)
	A	B	C	D	E			
A	4000	1600	600	1600	4200	7.50	1.30	21.75
	6000	1600	600	1600	4200	10.00	1.60	30.15
B	4000	1400	400	1600	3600	7.00	1.20	18.30
	6000	1400	400	1600	3600	9.00	1.50	25.50

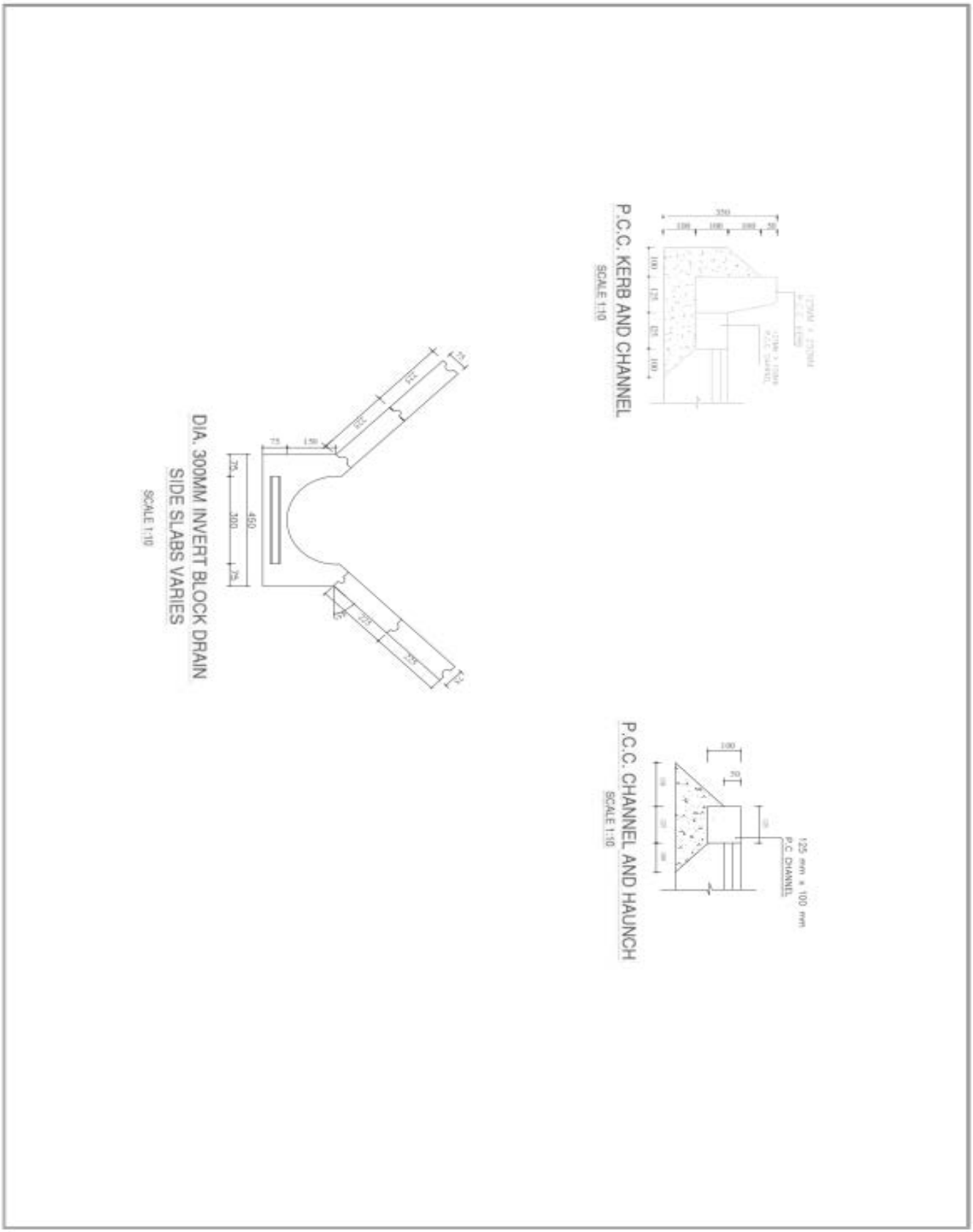
P.C.C. KERB AND CHANNEL
SCALE 1:10
DIA. 300MM INVERT BLOCK DRAIN
SIDE SLABS VARIES
SCALE 1:10
P.C.C. CHANNEL AND HAUNCH
SCALE 1:10
125 mm x 100 mm
P.C. CHANNEL

FIGURE 1 - PUBLICITY SIGN